US 20200002828A1

(19) United States

(12) Patent Application Publication

MILLS

(10) Pub. No.: US 2020/0002828 A1

(43) Pub. Date: Jan. 2, 2020

(54) **ELECTRICAL POWER GENERATION SYSTEMS AND METHODS REGARDING SAME**

(71) Applicant: **BRILLIANT LIGHT POWER, INC.**, Cranbury, NJ (US)

(72) Inventor: **RANDELL L. MILLS**, CRANBURY, NJ (US)

(73) Assignee: **BRILLIANT LIGHT POWER, INC.**, CRANBURY, NJ (US)

(21) Appl. No.: **16/567,689**

(22) Filed: **Sep. 11, 2019**

Related U.S. Application Data

(63) Continuation of application No. 15/314,196, filed on Nov. 28, 2016, now Pat. No. 10,443,139, filed as application No. PCT/US2015/033165 on May 29, 2015.

(60) Provisional application No. 62/004,883, filed on May 29, 2014, provisional application No. 62/012,193, filed on Jun. 13, 2014, provisional application No. 62/016,540, filed on Jun. 24, 2014, provisional application No. 62/021,699, filed on Jul. 7, 2014, provisional application No. 62/023,586, filed on Jul. 11, 2014, provisional application No. 62/026,698, filed on Jul. 20, 2014, provisional application No. 62/037,152, filed on Aug. 14, 2014, provisional application No. 62/041,026, filed on Aug. 22, 2014, provisional application No. 62/058,844, filed on Oct. 2, 2014, provisional application No. 62/068,592, filed on Oct. 24, 2014, provisional application No. 62/083,029, filed on Nov. 21, 2014, provisional application No. 62/087,234, filed on Dec. 4, 2014, provisional application No. 62/092,230, filed on Dec. 15, 2014, provisional application No. 62/113,211, filed on Feb. 6, 2015, provisional application No. 62/141,079, filed on Mar. 31, 2015, provisional application No. 62/149,501, filed on Apr. 17, 2015, provisional application No. 62/159,230, filed on May 9, 2015, provisional application No. 62/165,340, filed on May 22, 2015.

Publication Classification

(51) **Int. Cl.**

C25B 13/04	(2006.01)
H05H 1/24	(2006.01)
H01L 31/0725	(2006.01)
H01L 31/0735	(2006.01)
H02S 40/32	(2006.01)
H02S 40/38	(2006.01)
H02S 40/22	(2006.01)
H02S 40/42	(2006.01)
C25B 1/04	(2006.01)

(52) **U.S. Cl.**

CPC ***C25B 13/04*** (2013.01); ***H05H 1/24*** (2013.01); ***H01L 31/0725*** (2013.01); ***H01L 31/0735*** (2013.01); *H05H 2277/13* (2013.01); ***H02S 40/38*** (2014.12); ***H02S 40/22*** (2014.12); ***H02S 40/42*** (2014.12); ***C25B 1/04*** (2013.01); ***H02S 40/32*** (2014.12)

(57) **ABSTRACT**

A solid or liquid fuel to plasma to electricity power source that provides at least one of electrical and thermal power comprising (i) at least one reaction cell for the catalysis of atomic hydrogen to form hydrinos, (ii) a chemical fuel mixture comprising at least two components chosen from: a source of H_2O catalyst or H_2O catalyst; a source of atomic hydrogen or atomic hydrogen; reactants to form the source of H_2O catalyst or H_2O catalyst and a source of atomic hydrogen or atomic hydrogen; one or more reactants to initiate the catalysis of atomic hydrogen; and a material to cause the fuel to be highly conductive, (iii) a fuel injection system such as a railgun shot injector, (iv) at least one set of electrodes that confine the fuel and an electrical power source that provides repetitive short bursts of low-voltage, high-current electrical energy to initiate rapid kinetics of the hydrino reaction and an energy gain due to forming hydrinos to form a brilliant-light emitting plasma, (v) a product recovery system such as at least one of an augmented plasma railgun recovery system and a gravity recovery system, (vi) a fuel pelletizer or shot maker comprising a smelter, a source or hydrogen and a source of H_2O, a dripper and a water bath to form fuel pellets or shot, and an agitator to feed shot into the injector, and (vii) a power converter capable of converting the high-power light output of the cell into electricity such as a concentrated solar power device comprising a plurality of ultraviolet (UV) photoelectric cells or a plurality of photoelectric cells, and a UV window.

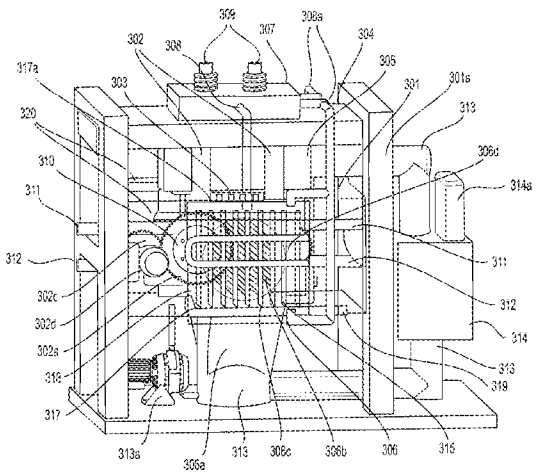

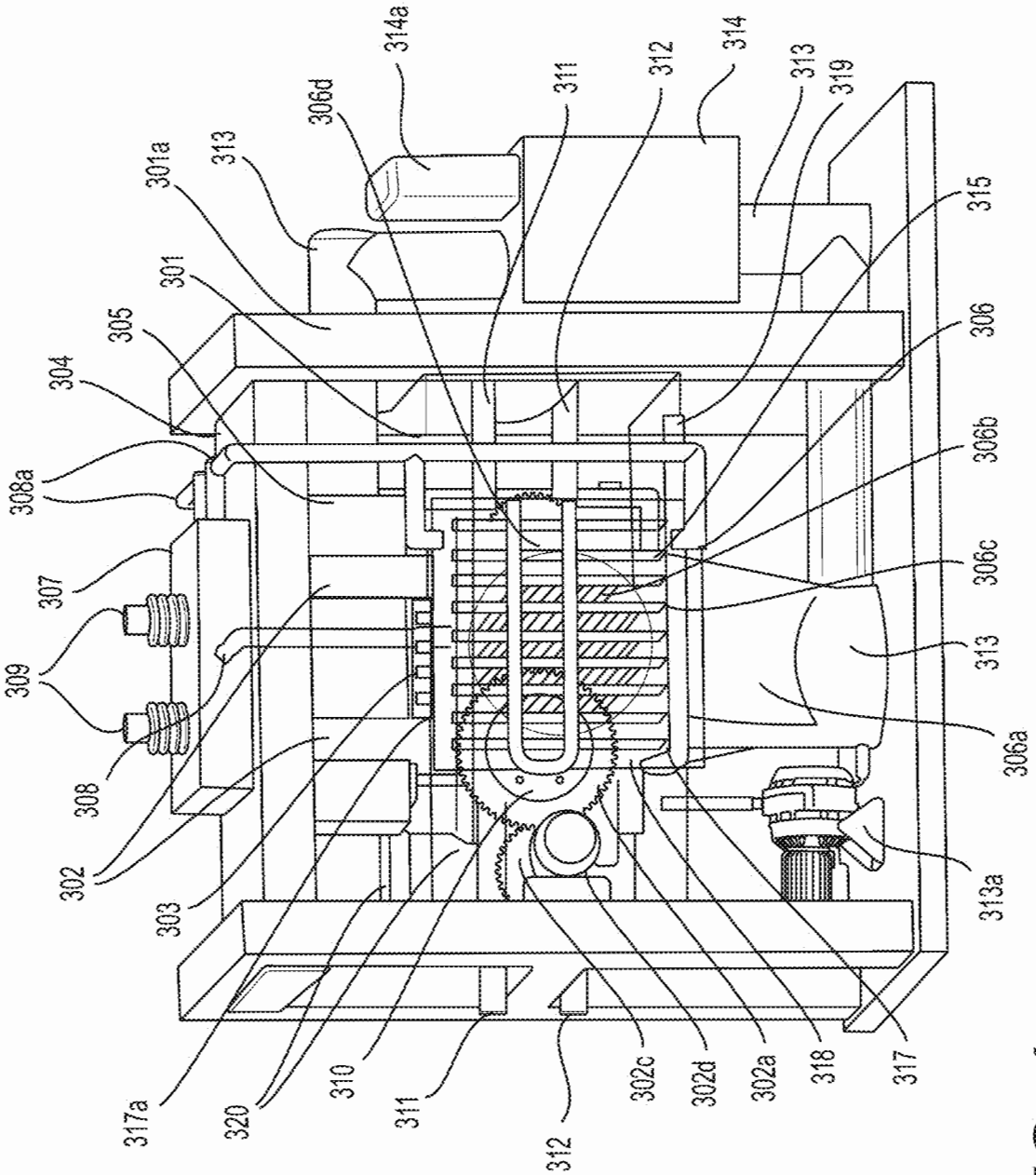
314a
306d
313
301a
301
305
304
308a
307
309
308
302
303
317a
320
310
311
312
302c
302d
302a
318
317
313a
306a
313
306c
306b
306
315
319
313
314
312
311

FIG. 1

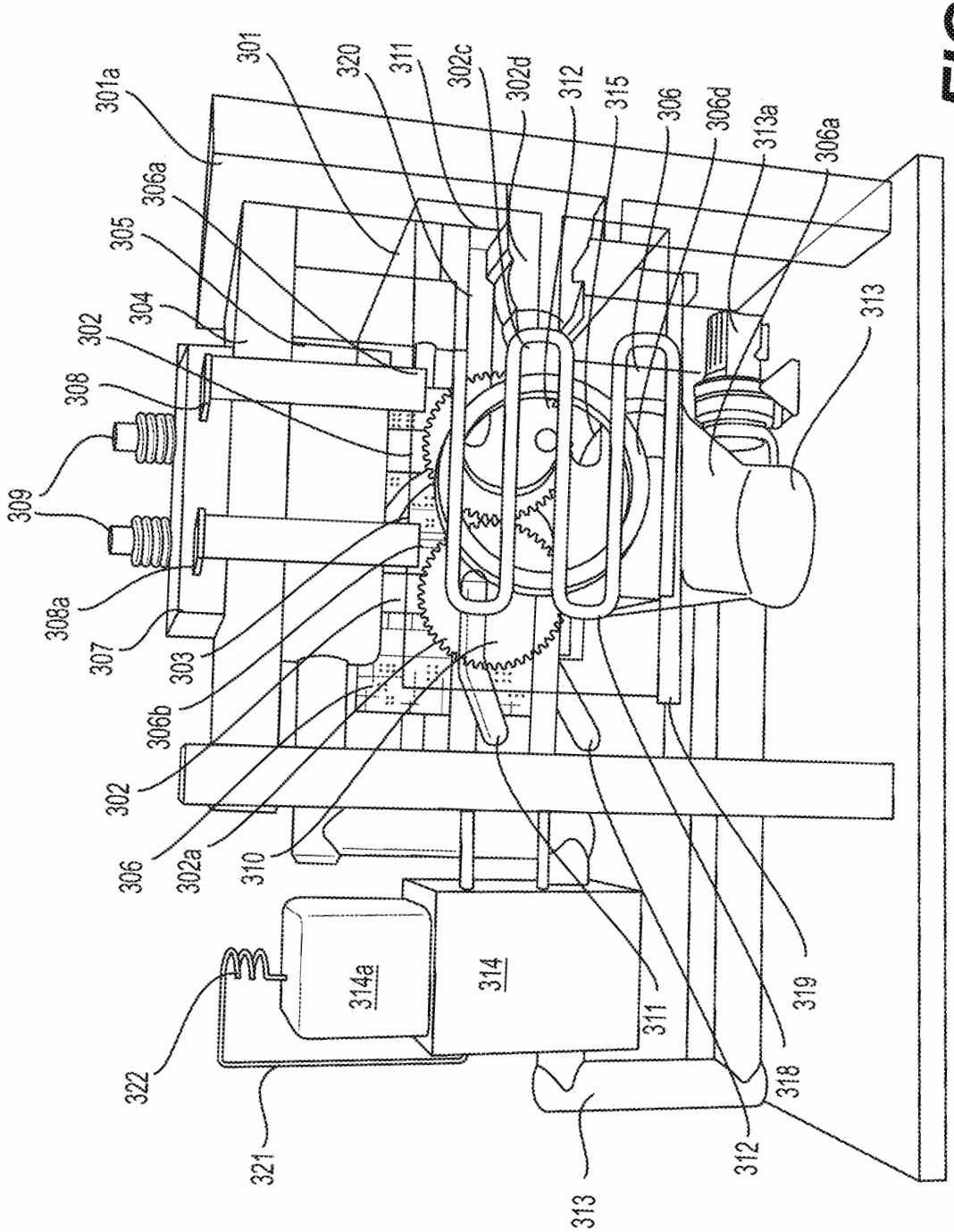
301a
301
320
311
302c
302d
312
315
306
306d
313a
306a
306a
305
304
302
308
309
308a
307
303
306b
302
306
302a
310
313
319
318
312
311
314
314a
322
321
313

FIG. 2A

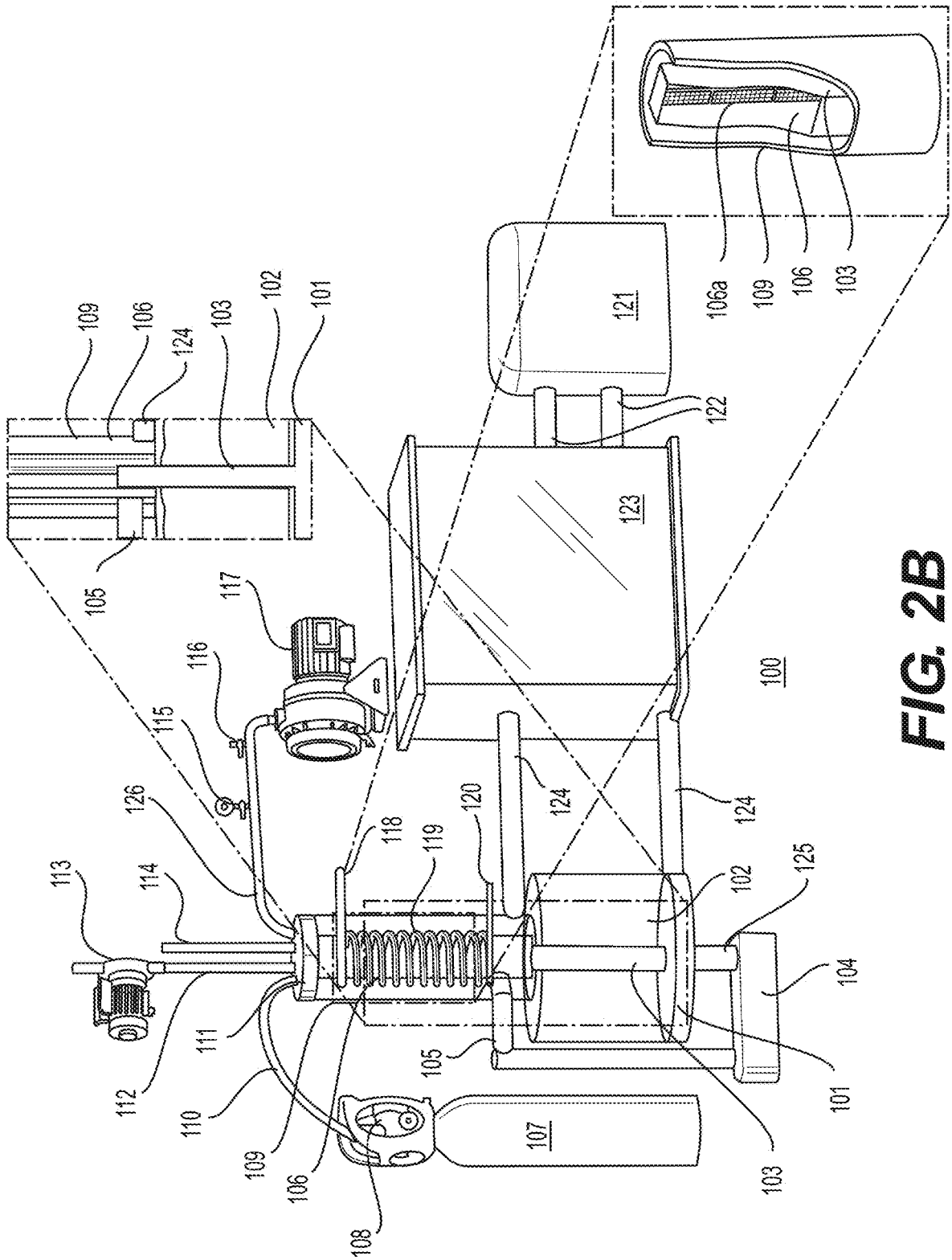
100
101
102
103
104
105
106
106a
107
108
109
110
111
112
113
114
115
116
117
118
119
120
121
122
123
124
125
126

FIG. 2B

1. STRUCTURAL SUPPORT
2. SOURCE OF ELECTRICAL POWER
3. OUTPUT POWER CONTROLLER/CONDITIONER
4. BEARING SUPPORT FOR ROLLER SHAFT
5. TROUGH
6. OUTPUT POWER TERMINAL
7. ROLLER SHAFT
8. ROLLER ELECTRODE
9. NEGATIVE ELECTRODE BUS BAR
10. POSITIVE ELECTRODE BUS BAR
11. WATER RESERVOIR
12. ROLLER MOTOR 1
13. ROLLER MOTOR 2
14. PARABOLIC MIRROR
15. PHOTOVOLTAIC PANEL
16. JET WATER LINE
17. WATER EJECTION PUMP
18. WATER SUCKING PUMP
19. WATER SUCKING LINE
20. WINDOW
21. RINSING LINE WITH JETS
22. MIRROR FASTENER
23. SEMI-TRANSPARENT MIRROR
24. SCRAPER AND COLLECTION AREA
26. CELL
26a. OPTICAL DISTRIBUTION AND PHOTOVOLTAIC CONVERSION SYSTEM
26b. PV BUS BAR

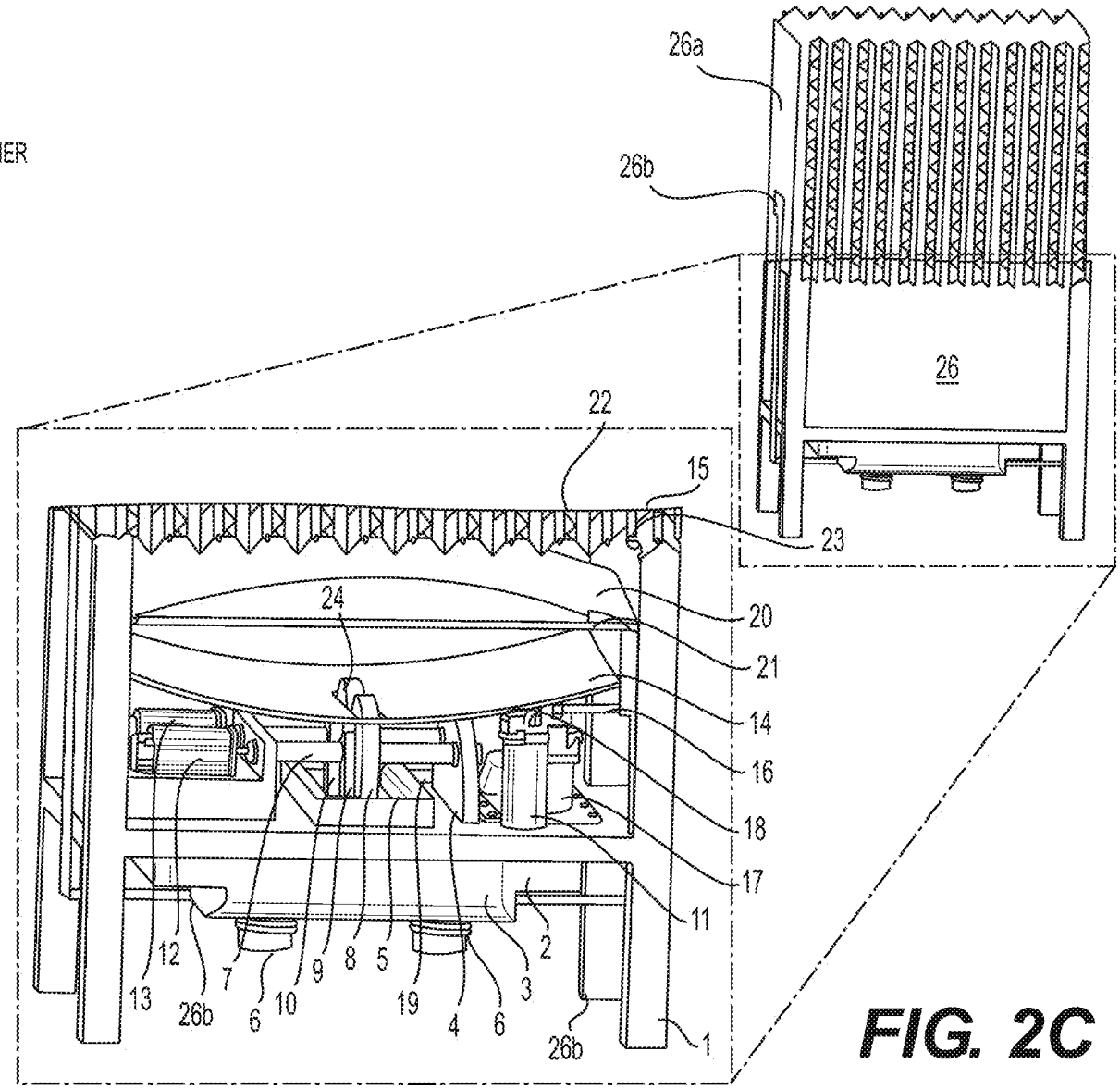

FIG. 2C

1. STRUCTURAL SUPPORT
2. SOURCE OF ELECTRICAL POWER
3. OUTPUT POWER CONTROLLER/CONDITIONER
4. BEARING SUPPORT FOR ROLLER SHAFT
5. TROUGH
6. OUTPUT POWER TERMINAL
7. ROLLER SHAFT
8. ROLLER ELECTRODE
9. NEGATIVE ELECTRODE BUS BAR
10. POSITIVE ELECTRODE BUS BAR
11. WATER RESERVOIR
12. ROLLER MOTOR 1
13. ROLLER MOTOR 2
14. PARABOLIC MIRROR
15. PHOTOVOLTAIC PANEL
16. JET WATER LINE
17. WATER EJECTION PUMP
18. WATER SUCKING PUMP
19. WATER SUCKING LINE
20. WINDOW
21. RINSING LINE WITH JETS
22. MIRROR FASTENER
23. SEMI-TRANSPARENT MIRROR
24. SCRAPER AND COLLECTION AREA
26. CELL
26a. OPTICAL DISTRIBUTION AND PHOTOVOLTAIC CONVERSION SYSTEM
26b. PV BUS BAR
27. BATTERY
28. STARTER CIRCUIT
29. ARGON SUPPLY
30. ARGON DISTRIBUTION
31. COOLING SYSTEM
32. DC POWER SUPPLY
33. DC REGENERATOR
34. DC POWER STORAGE
35. DC/AC POWER INVERTER
36. VFD DRIVE
37. GAS PUMP
38. GAS PUMP RETURN LINE

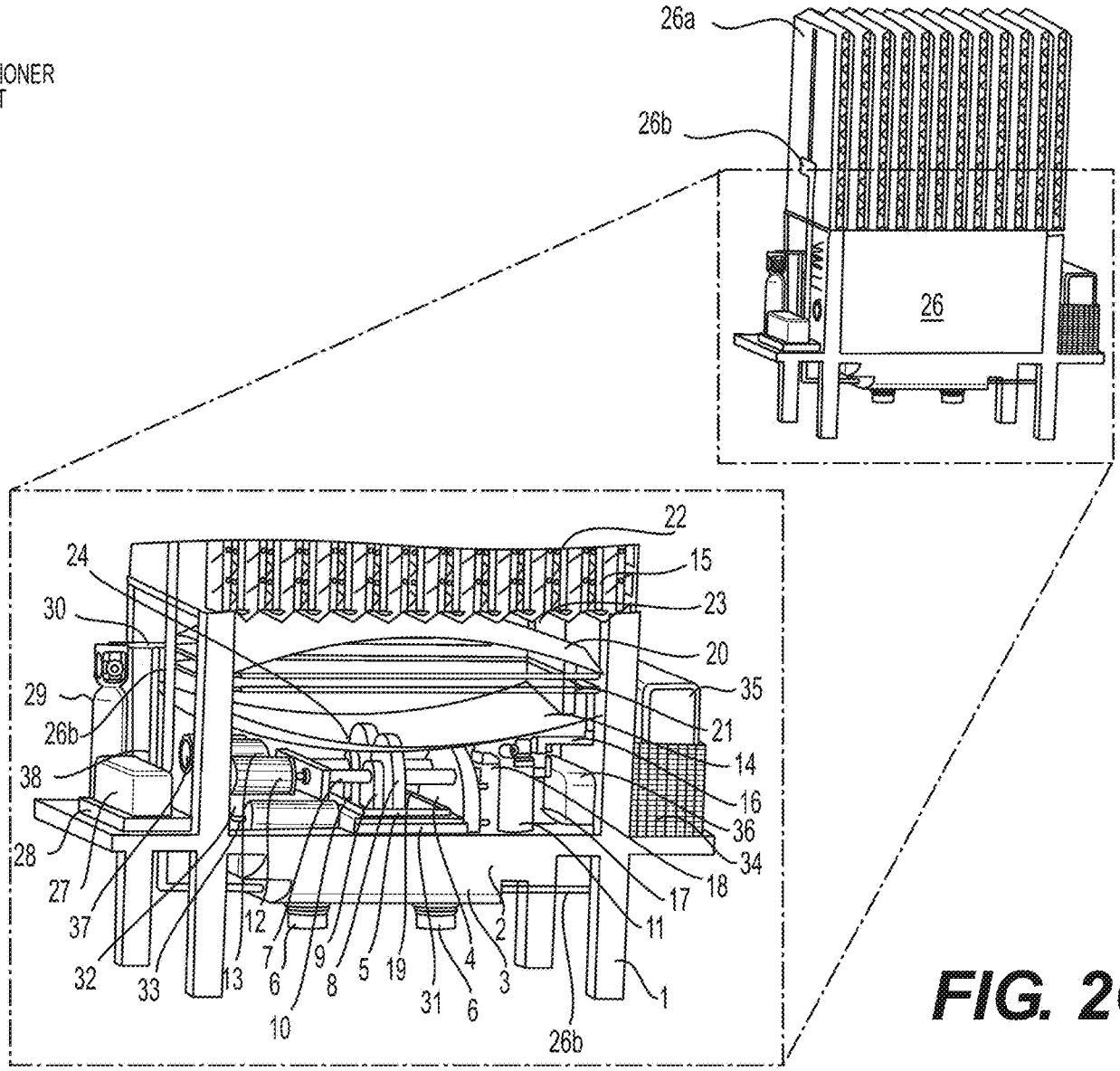

FIG. 2C1

1. STRUCTURAL SUPPORT
2. SOURCE OF ELECTRICAL POWER
3. OUTPUT POWER CONTROLLER/CONDITIONER
4. BEARING SUPPORT FOR ROLLER SHAFT
5. TROUGH
6. OUTPUT POWER TERMINAL
7. ROLLER SHAFT
8. ROLLER ELECTRODE
9. NEGATIVE ELECTRODE BUS BAR
10. POSITIVE ELECTRODE BUS BAR
11. WATER RESERVOIR
12. ROLLER MOTOR 1
13. ROLLER MOTOR 2
14. PARABOLIC MIRROR
15. PHOTOVOLTAIC PANEL
16. JET WATER LINE
17. WATER EJECTION PUMP
18. WATER SUCKING PUMP
19. WATER SUCKING LINE
20. WINDOW
21. RINSING LINE WITH JETS
22. MIRROR FASTENER
23. SEMI-TRANSPARENT MIRROR
24. SCRAPER AND COLLECTION AREA
26. CELL
26a. OPTICAL DISTRIBUTION AND PHOT OVOLTAIC CONVERSION SYSTEM
26b. PV BUS BAR
27. BATTERY
28. STARTER CIRCUIT
29. ARGON SUPPLY
30. ARGON DISTRIBUTION
31. COOLING SYSTEM
32. DC POWER SUPPLY
33. DC REGENERATOR
34. DC POWER STORAGE
35. DC/AC POWER INVERTER
36. VFD DRIVE
37. GAS PUMP
37a. GAS PUMP INLET
38. GAS PUMP RETURN LINE

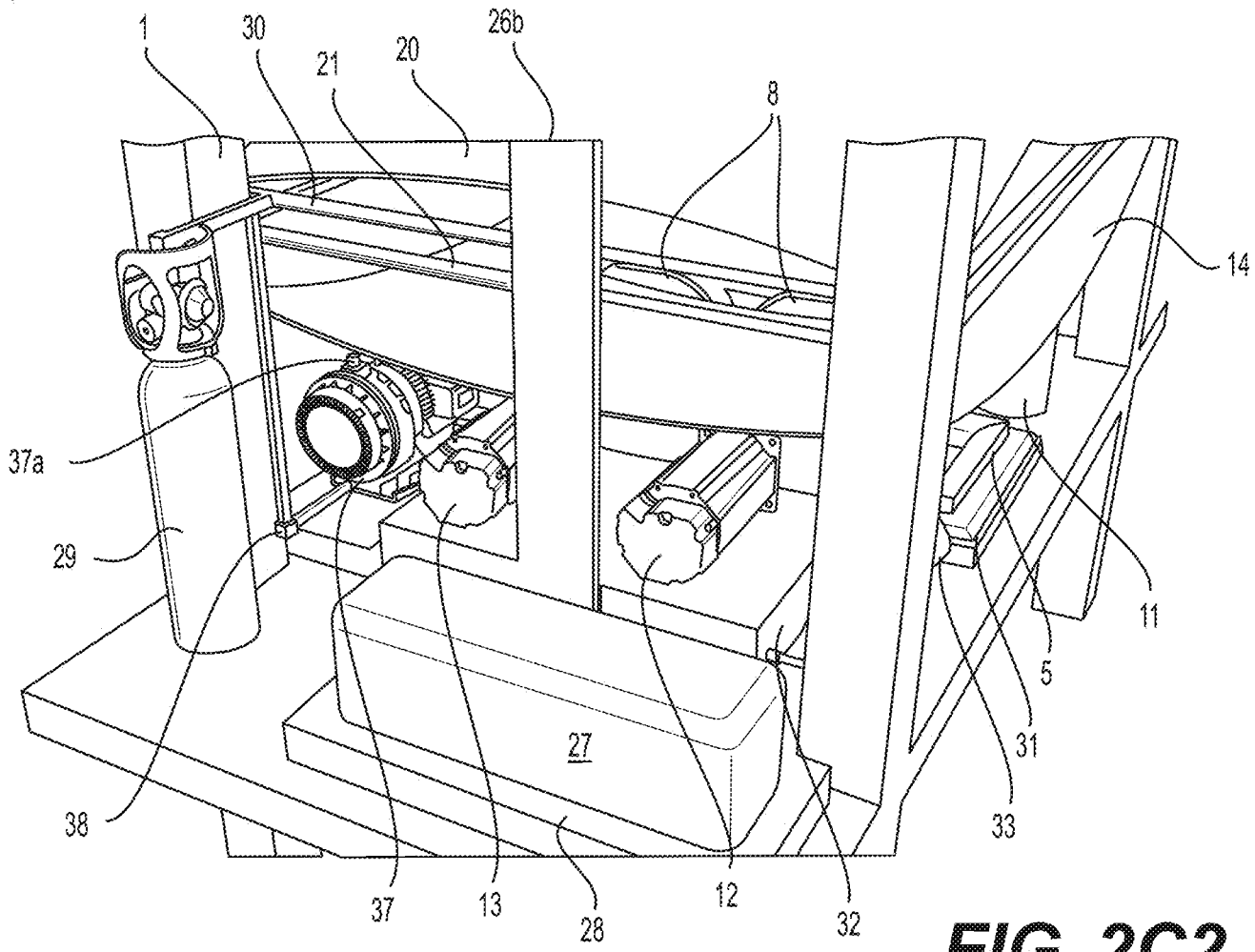

FIG. 2C2

20. WINDOW
20a. LOUVER FAN
39. LOUVER SLATS
40. LOUVRE BRACKET
41. BRACKET HOLDER
42. BEARING
43. SLAT MOTOR
44. DUAL PULLEY
45. DRIVE BELT
46. SLAT BELT

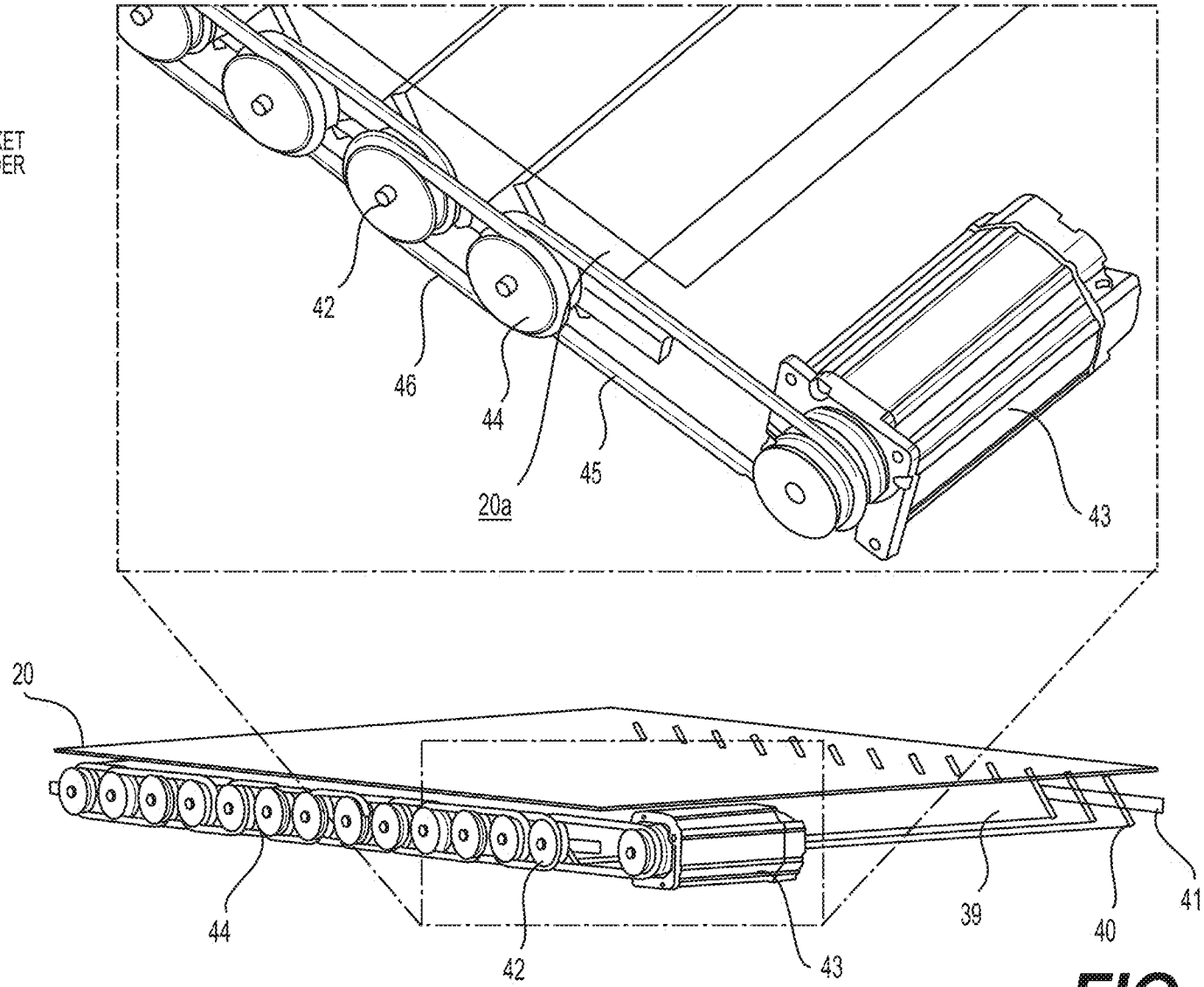

FIG. 2C3

1. STRUCTURAL SUPPORT
2. SOURCE OF ELECT RICAL POWER
3. OUTPUT POWER CONTROLLER/CONDITIONER
4. BEARING SUPPORT FOR ROLLER SHAFT
4a. BEARING
5. TROUGH
7. ROLLER SHAFT
12. ROLLER MOTOR 1
13. ROLLER MOTOR 2
19. WATER SUCKING LINE
25. CHUTE
27. APPLICATOR WHEEL
28. APPLICATOR FLAPS
29. APPLICATOR SHAFT
30. APPLICATOR WHEEL MOTOR

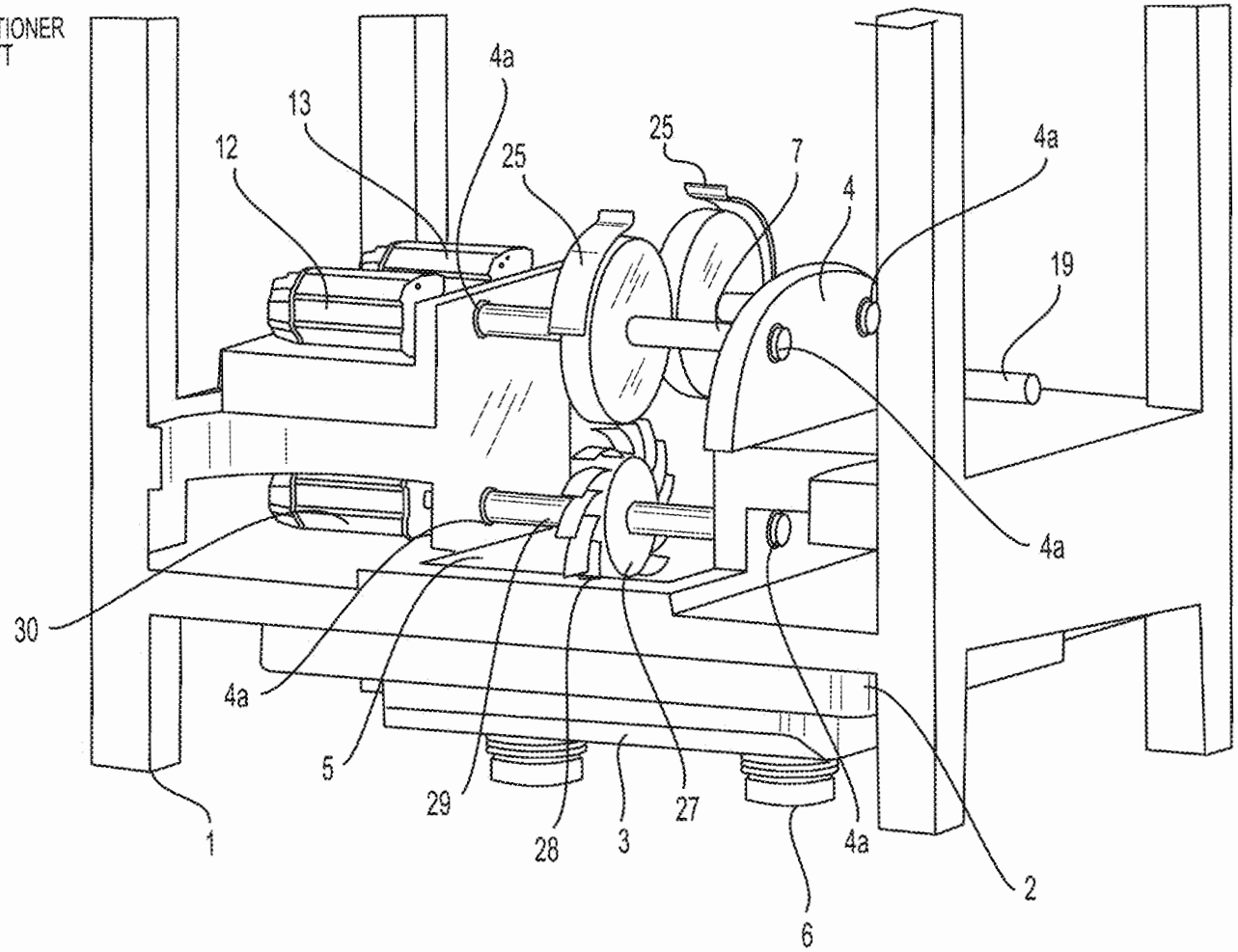

FIG. 2D

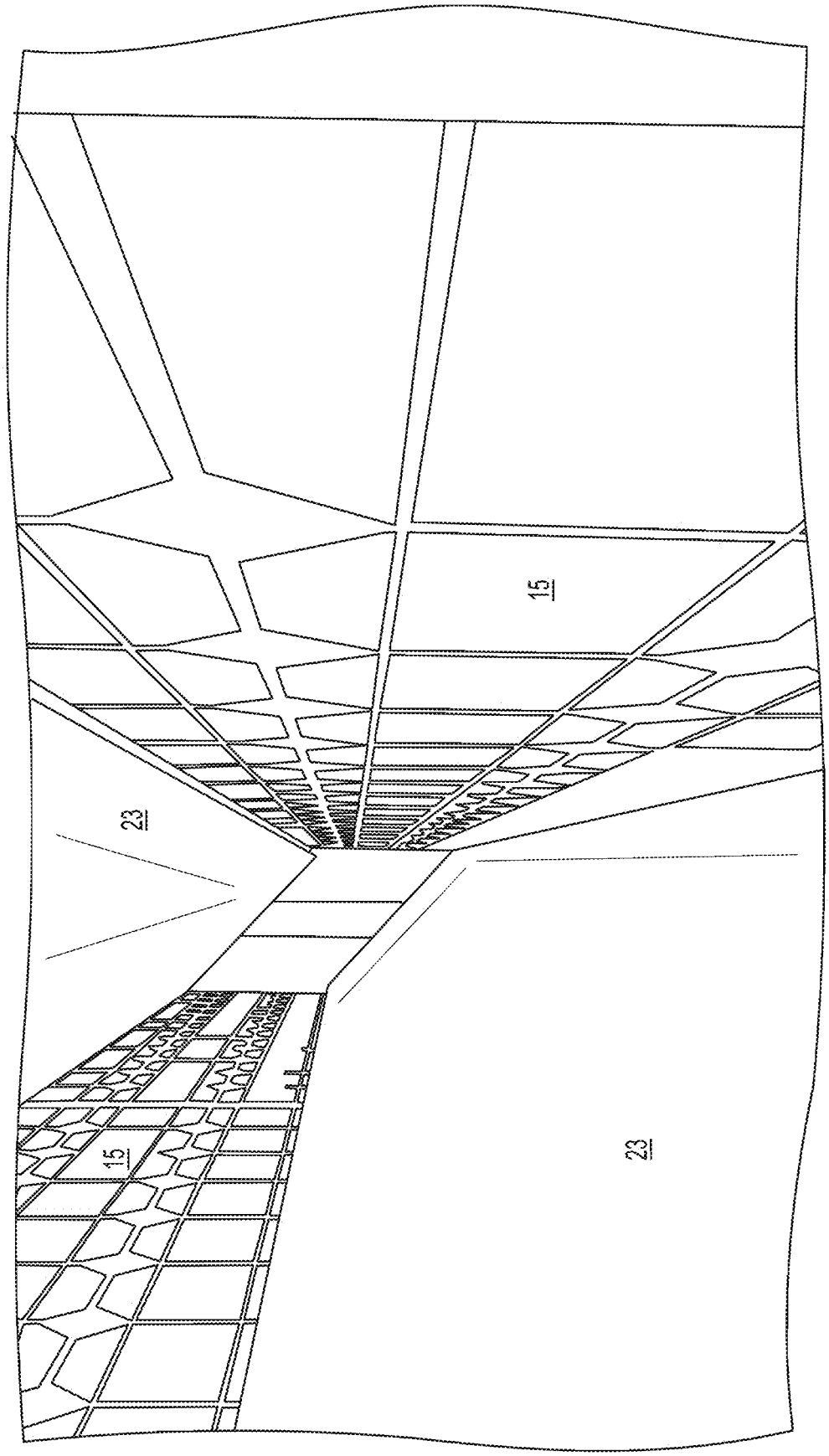

FIG. 2E

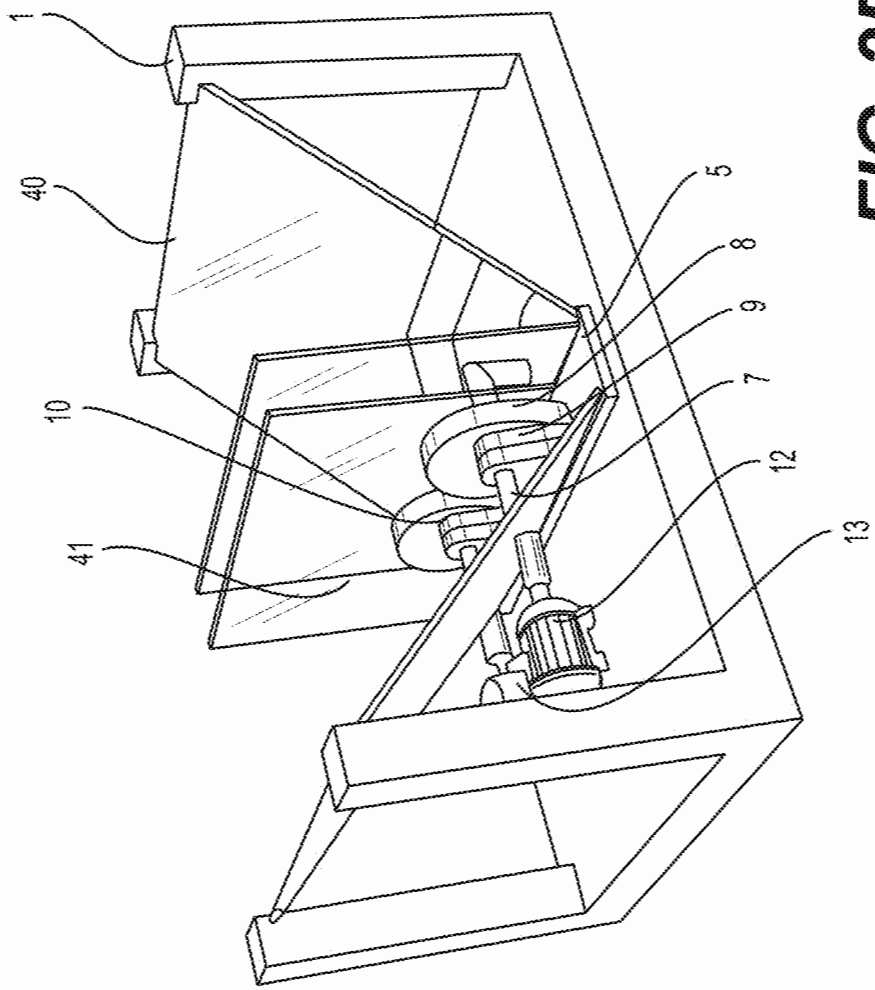

FIG. 2F

1. STRUCTURAL SUPPORT
5. TROUGH
7. ROLLER SHAFT
8. ROLLER ELECTRODE
9. NEGATIVE ELECTRODE BUS BAR
10. POSITIVE ELECTRODE BUS BAR
12. ROLLER MOTOR 1
13. ROLLER MOTOR 2
40. TILTED MIRROR
41. PLANE MIRROR

1. STRUCTURAL SUPPORT
4. BEARING SUPPORT FOR ROLLER SHAFT
7. ROLLER SHAFT
8. ROLLER ELECTRODE
11. WATER RESERVOIR
12. ROLLER MOTOR 1
13. ROLLER MOTOR 2
14. PARABOLIC MIRROR
16. JET WATER LINE
17. WATER EJECTION PUMP
18. WATER SUCKING PUMP
19. WATER SUCKING LINE
20b. ELECTRODE HOUSING
21. RINSING LINE WITH JETS

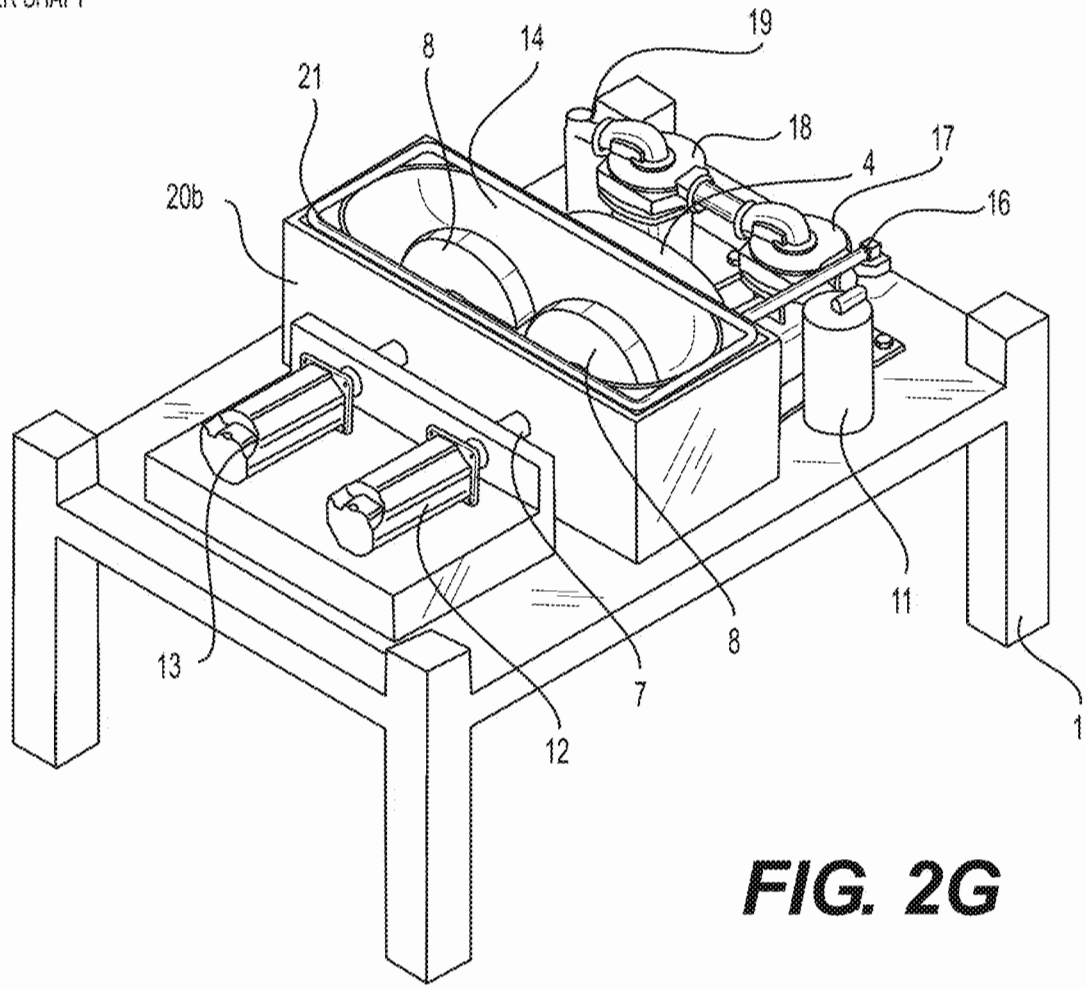

FIG. 2G

7. ROLLER SHAFT
8. ROLLER ELECTRODE
11. WATER RESERVOIR
12. ROLLER MOTOR 1
14. PARABOLIC MIRROR
16. JET WATER LINE
17. WATER EJECTION PUMP
18. WATER SUCKING PUMP
19. WATER SUCKING LINE
20. WINDOW
20a. LOUVER FAN
20b. ELECTRODE HOUSING
21. RINSING LINE WITH JETS
39. LOUVER SLATS
40. LOUVER BRACKET
41. BRACKET HOLDER
43. SLAT MOTOR
44. DUAL PULLEY
45. DRIVE BELT
46. SLAT BELT
47. ROLLER GASKET
48. SLURRY
49. WATER PERMEABLE MEMBRANE/FRIT
50. WATER SENSOR
52. CHANNEL
53. GAS DISTRIBUTION DUCT
53a. DUCT BLOWER
64. GAS COLLECTION DUCT
65. WATER SUCTION INLET
66. SLURRY AGITATOR
67. SLURRY AGITATOR MOTOR
68. HYDROGEN TANK
69. HYDROGEN SENSOR
70. HYDROGEN FEED LINE

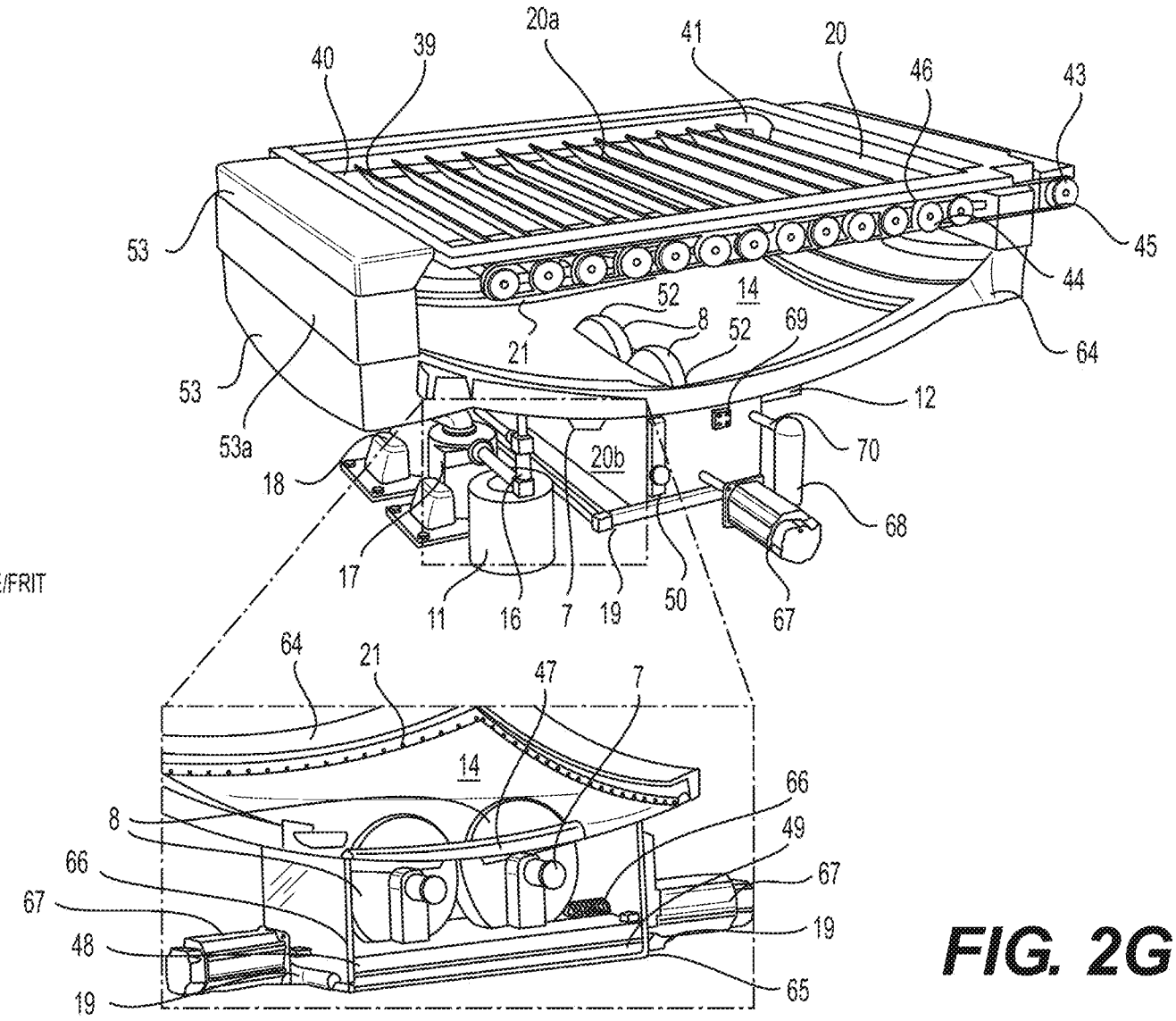

FIG. 2G1

14. PARABOLIC MIRROR
21. RINSING LINE WITH JETS
53. GAS DISTRIBUTION DUCT
53a. DUCT BLOWER
64. GAS COLLECTION DUCT

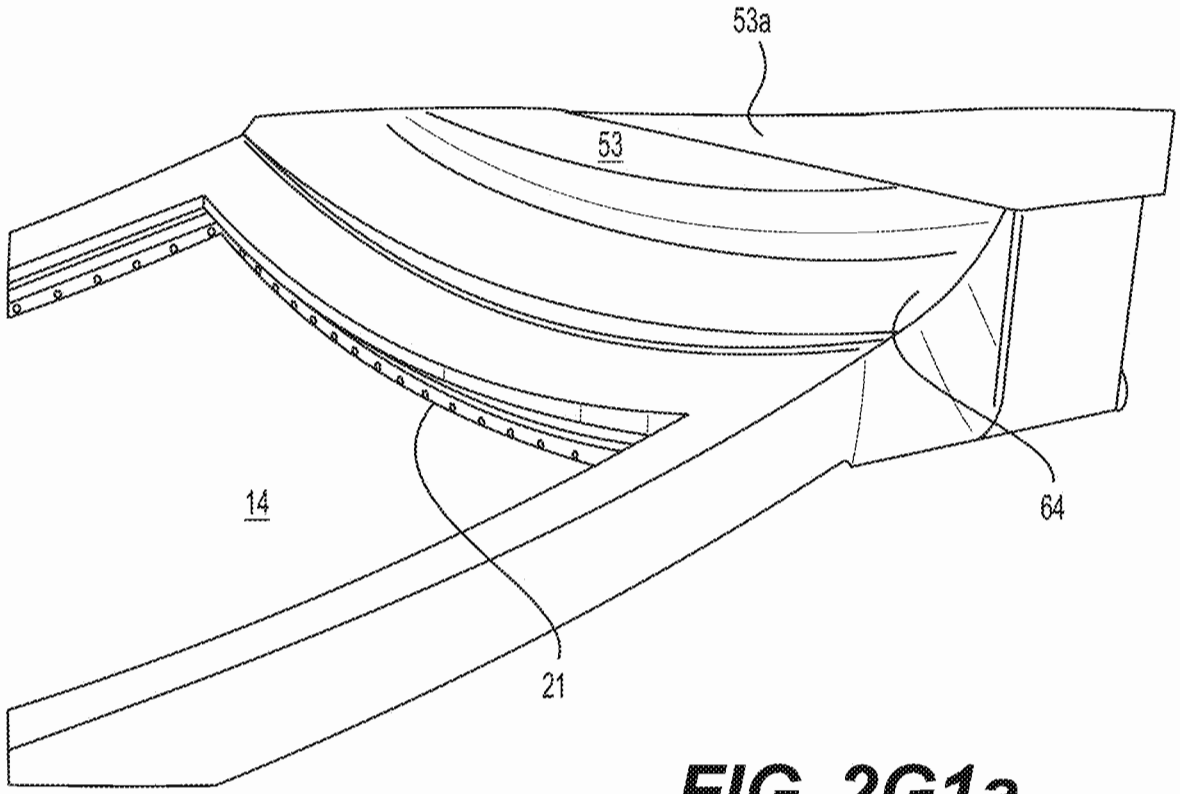

FIG. 2G1a

7. ROLLER SHAFT
8. ROLLER ELECTRODE
11. WATER RESERVOIR
12. ROLLER MOTOR 1
14. PARABOLIC MIRROR
16. JET WATER LINE
17. WATER EJECTION PUMP
18. WATER SUCKING PUMP
19. WATER SUCKING LINE
20. WINDOW
20b. ELECTRODE HOUSING
20c. PERFORATED WINDOW
21. RINSING LINE WITH JETS
47. ROLLER GASKET
48. SLURRY
49. WATER PERMEABLE MEMBRANE/FRIT
50. WATER SENSOR
52. CHANNEL
53. GAS DISTRIBUTION DUCT
53a. DUCT BLOWER
64. GAS COLLECTION DUCT
65. WATER SUCTION INLET
66. SLURRY AGITATOR
67. SLURRY AGITATOR MOTOR
68. HYDROGEN TANK
69. HYDROGEN SENSOR
70. HYDROGEN FEED LINE

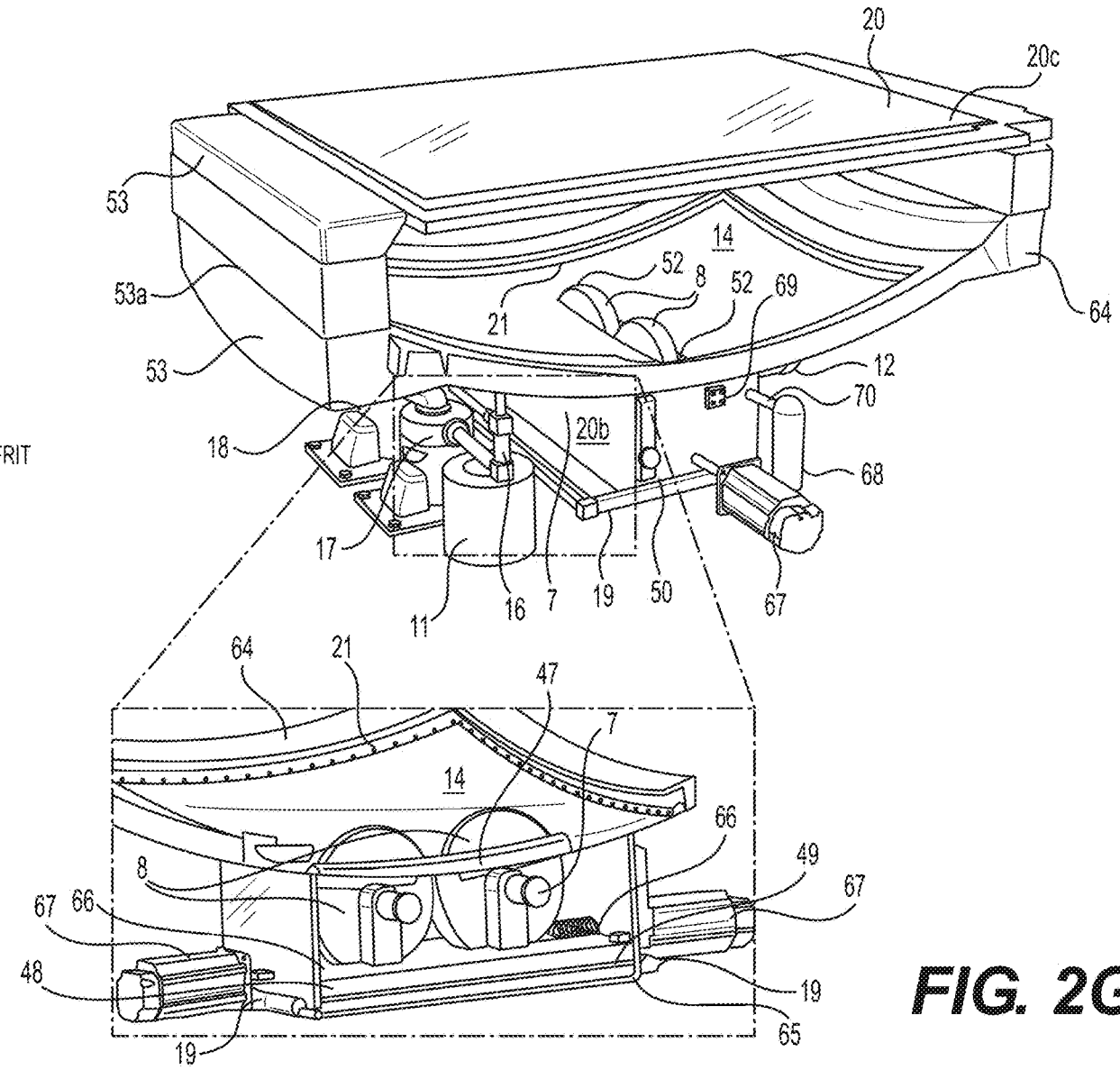

FIG. 2G1b

53. DUCT
53a. DUCT BLOWER
64. GAS COLLECTION DUCT
64a. BLOWER INLET
64b. BLOWER OUTLET
64c. DUCT INLET
64d. DUCT OUTLET
65. PLENUM

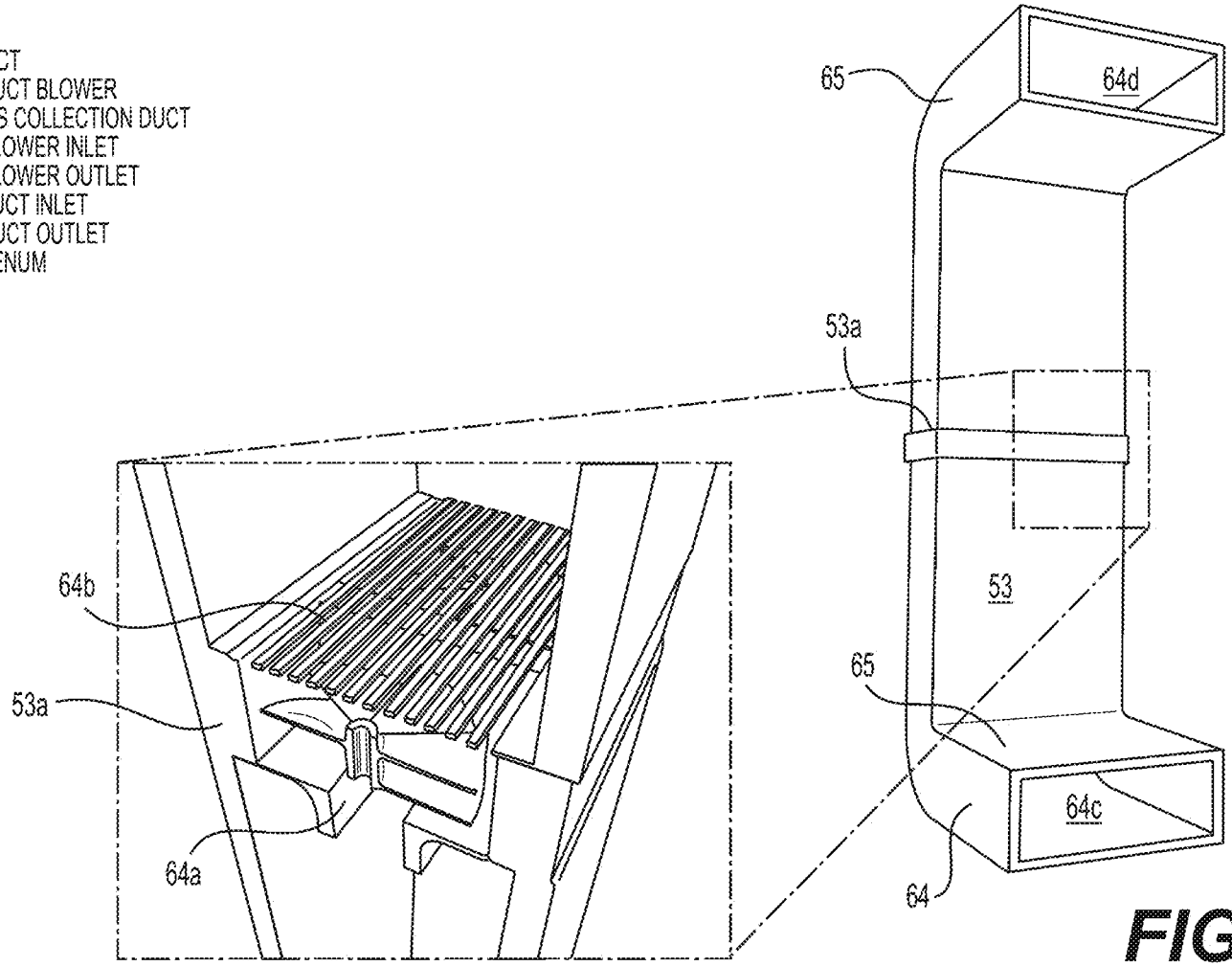

FIG. 2G1c

5. TROUGH
7. ROLLER SHAFT
8. ROLLER ELECTRODE
17. WATER EJECTION PUMP
18. WATER SUCKING PUMP
19. WATER SUCKING LINE
20b. ELECTRODE HOUSING
20d. EXTERNAL HOUSING WALLS
20e. CHAMBER
48. SLURRY
49. WATER PERMEABLE MEMBRANE/FRIT
66. SLURRY AGITATOR
67. SLURRY AGITATOR MOTOR

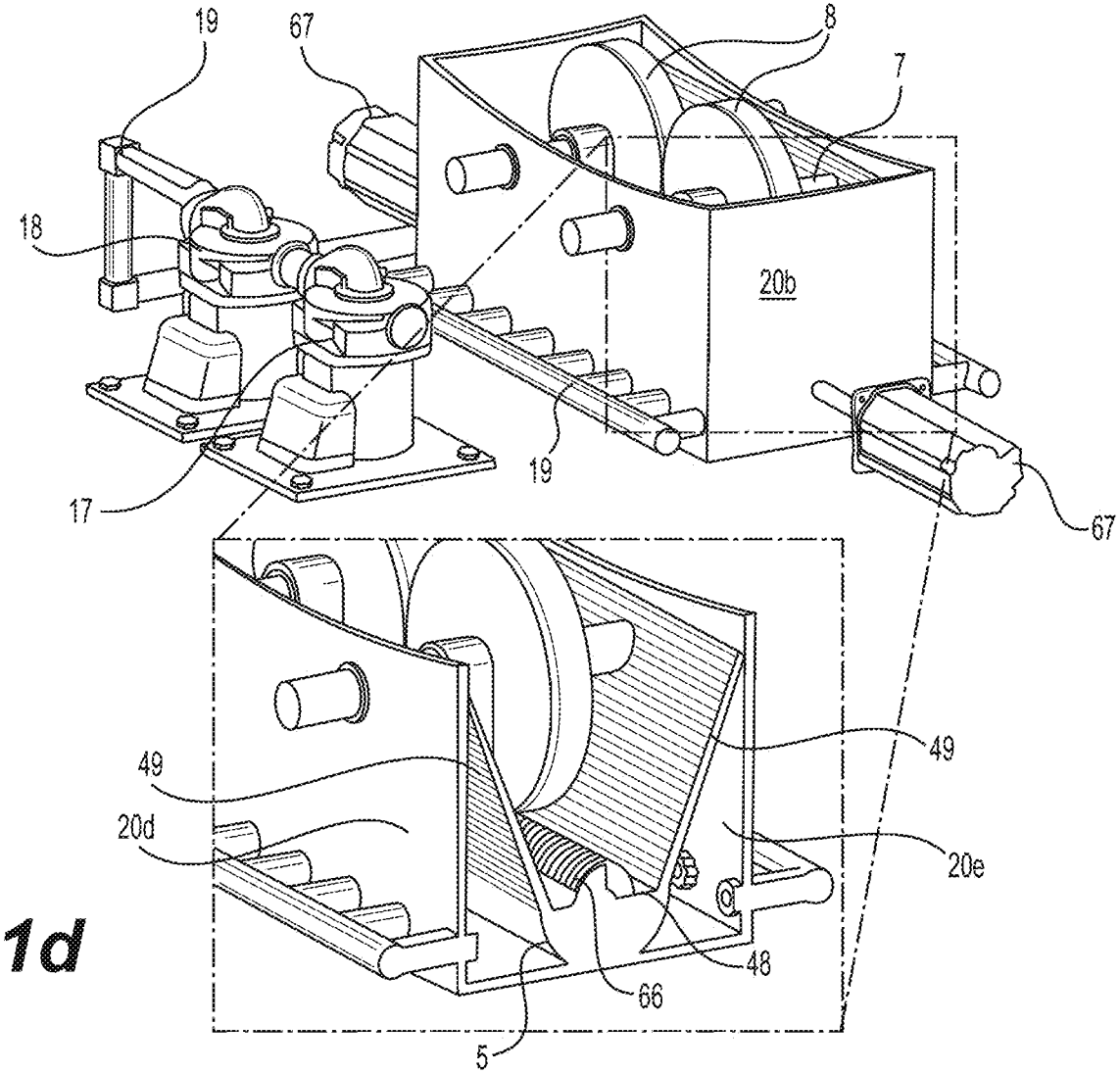

FIG. 2G1d

2. SOURCE OF ELECTRICAL POWER
5. TROUGH
7. ROLLER SHAFT
8. ROLLER ELECTRODE
9. PIVOTING BUS BAR
12. ROLLER MOTOR 1
13. ROLLER MOTOR 2
17. WATER EJECTION PUMP
18. WATER SUCKING PUMP
19. WATER SUCKING LINE
20b. ELECTRODE HOUSING
20d. EXTERNAL HOUSING WALLS
20e. CHAMBER
48. SLURRY
49. WATER PERMEABLE MEMBRANE/FRIT
57. TENSION SPRING
57a. SPRING MOUNT
59. DRIVE SHAFT GASKET
66. SLURRY AGITATOR
67. SLURRY AGITATOR MOTOR
71. BOTTOM INDIRECT DRIVE PULLEY
71a. TOP INDIRECT DRIVE PULLEY
72. SHAFT DRIVE BELT
73. DRIVE SHAFT BEARING
73a. PLANE BEARING
74. DRIVE SHAFT
75. WIRE CONNECTOR

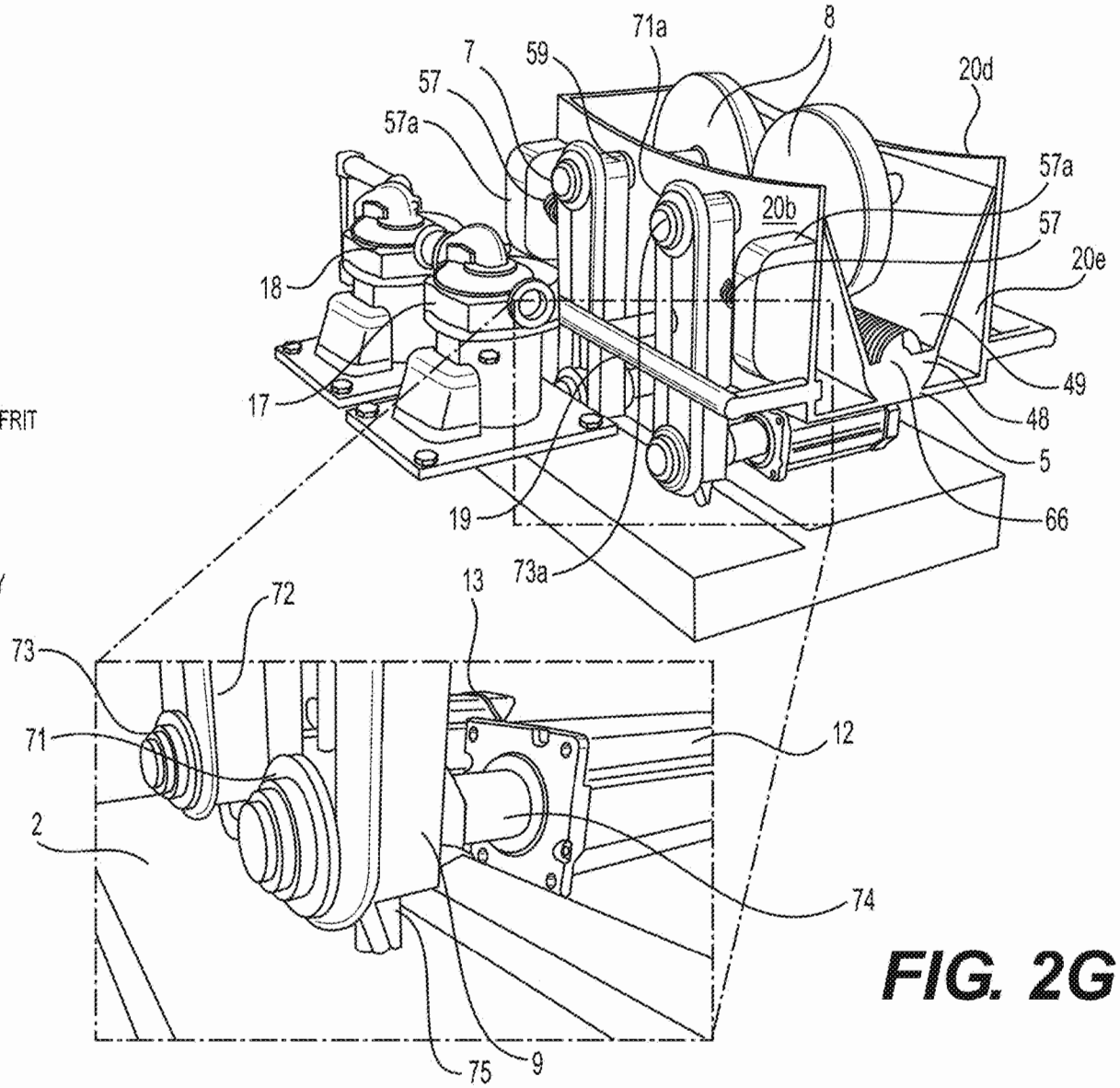

FIG. 2G1d1

4. BEARING SUPPORT FOR ROLLER SHAFT
5. SLURRY TROUGH
7. ROLLER SHAFT
8. ROLLER ELECTRODE
12. ROLLER MOTOR 1
13. ROLLER MOTOR 2
20b. ELECTRODE HOUSING
54. PIEZOELECTRIC ACTUATOR 1
55. PIEZOELECTRIC ACTUATOR 2
56. PIEZOELECTRIC ACTUATOR MOUNT
57. TENSION SPRING
57a. TENSION SPRING MOUNT
58. ELECTRODE HOUSING BRACKET
59. FLEXIBLE GASKET
60. SLIDE TRACK
61. BASE SUPPORT
62. MOVABLE TABLE
63. MOTOR MOUNTS

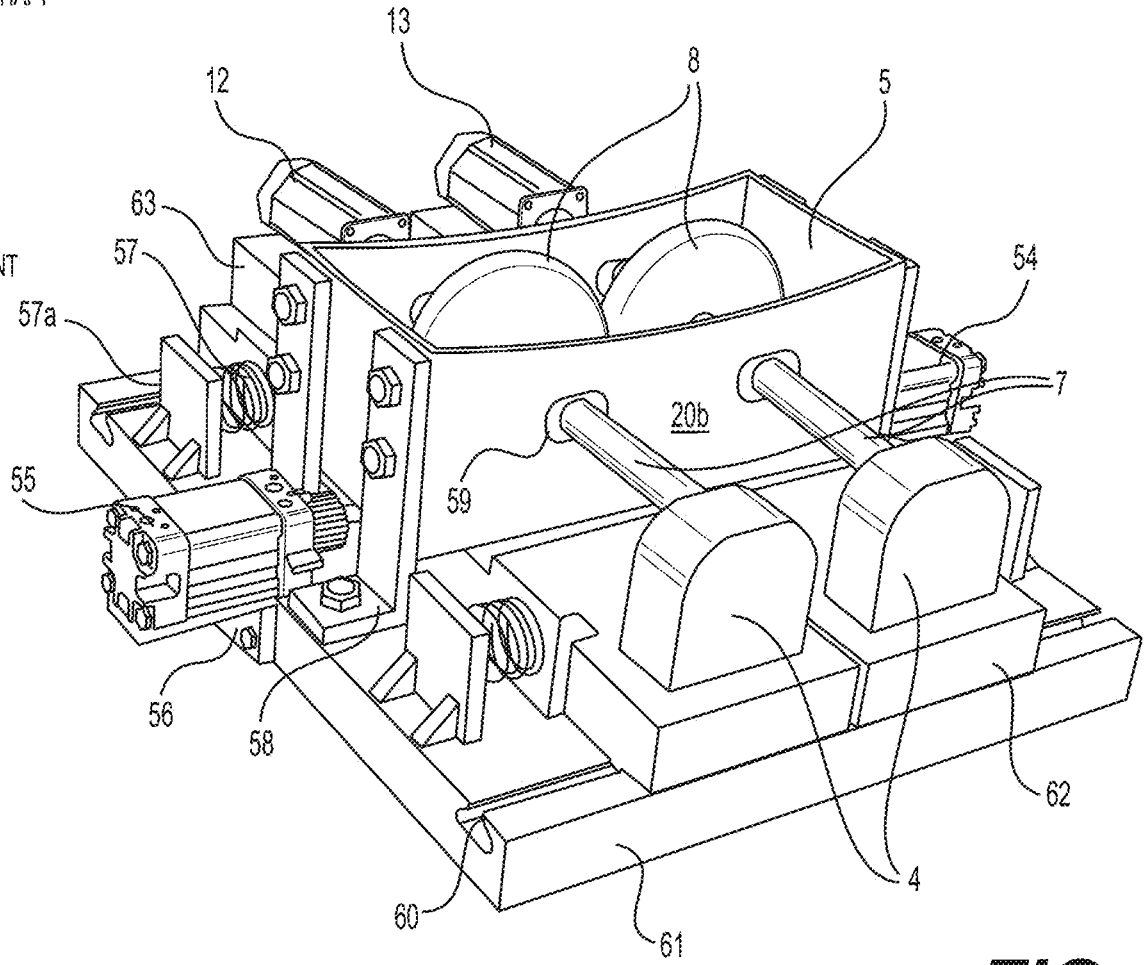

FIG. 2G1e

5. TROUGH
7. ROLLER SHAFT
8. ROLLER ELECTRODE
16. JET GAS LINE
17. RECIRCULATION BLOWER
17a. GAS SUCTION LINE
18. AGITATOR BLOWER
19. GAS INJECTION LINE
20b. ELECTRODE HOUSING
20d. EXTERNAL HOUSING WALLS
20e. CHAMBER
48. FUEL POWDER
49. GAS PERMEABLE MEMBRANE/FRIT
66. POWDER AGITATOR
67. POWDER AGITATOR MOTOR

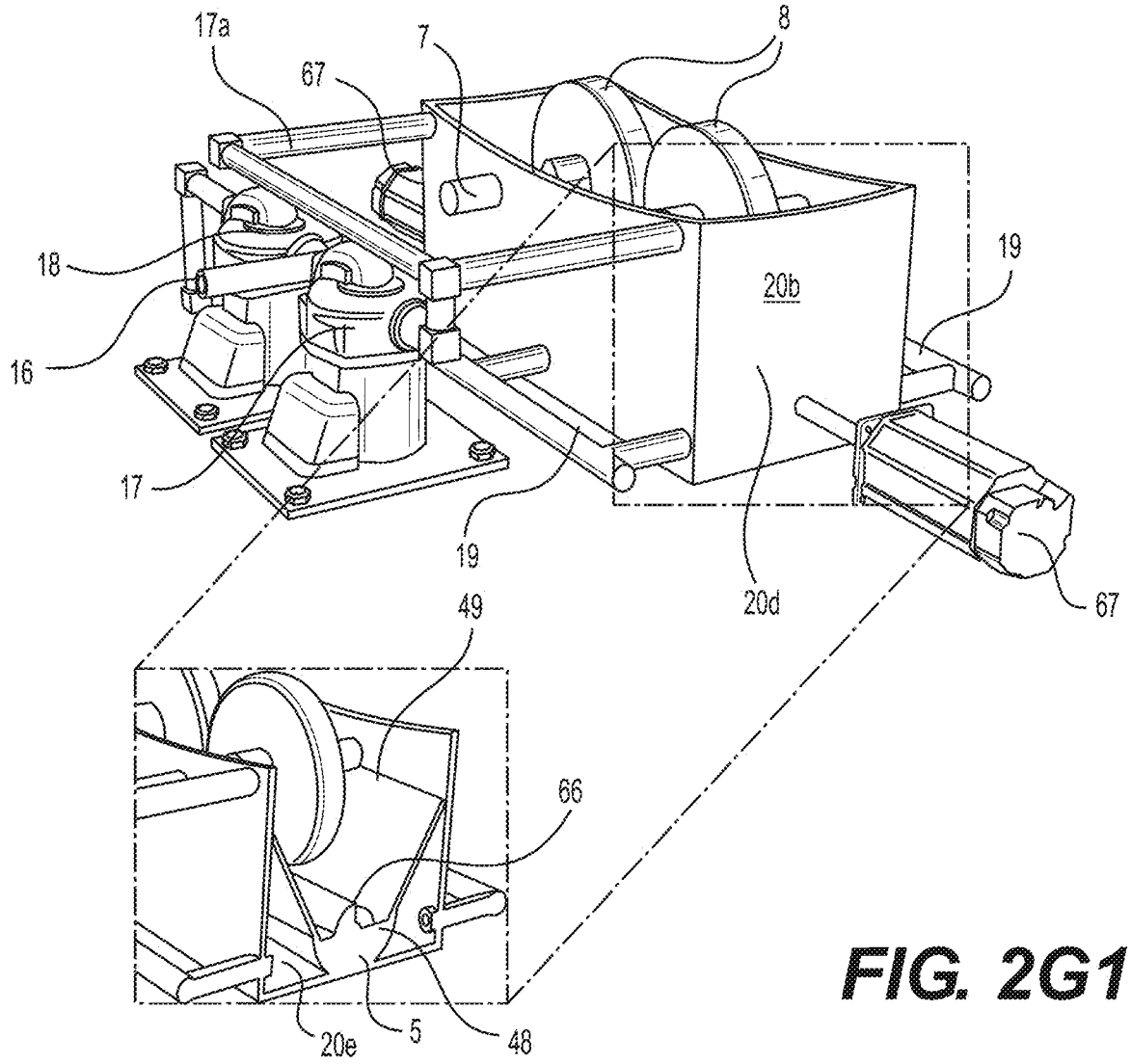

FIG. 2G1e1

4. BEARING SUPPORT FOR ROLLER SHAFT
5. TROUGH
7. ROLLER SHAFT
8. ROLLER ELECTRODE
20. WINDOW
20b. ELECTRODE HOUSING
57. TENSION SPRING
57a. TENSION SPRING MOUNT
58. ELECTRODE HOUSING BRACKET
59. FLEXIBLE GASKET
60. SLIDE TRACK
61. BASE SUPPORT
62. MOVABLE TABLE
66. AUGER
67. AUGER MOTOR
76. BLOWER INLET DUCT
77. BLOWER
78. BLOWER OUTLET DUCT
79. CYCLONE SEPARATOR INLET
79a. CYCLONE SEPARATOR MOUNT
80. CYCLONE SEPARATOR
81. GAS RETURN DUCT
82. OUTLET CHUTE
83. GAS JETS

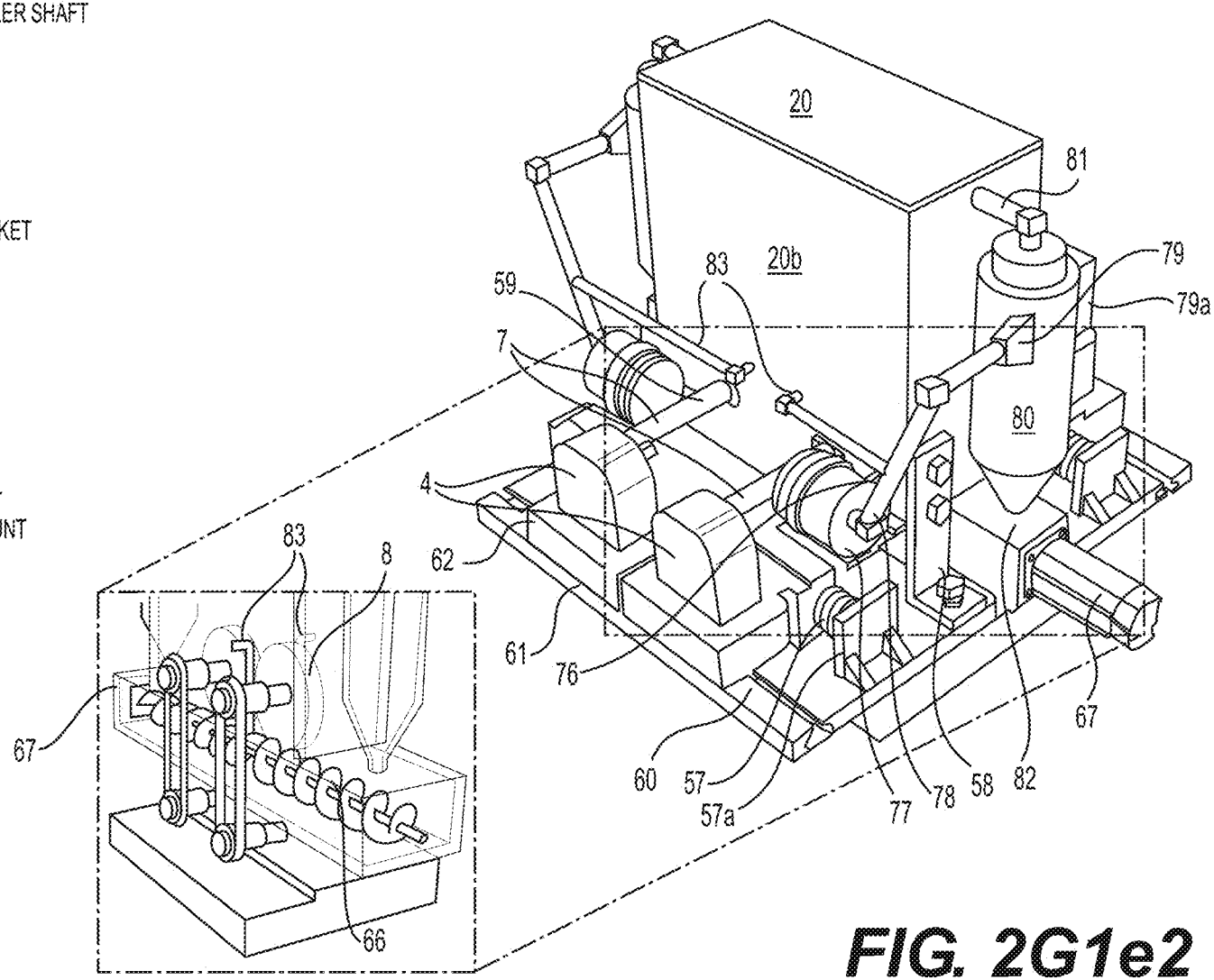

FIG. 2G1e2

4. BEARING SUPPORT FOR ROLLER SHAFT
5. TROUGH
7. ROLLER SHAFT
8. ROLLER ELECTRODE
12. ROLLER MOTOR 1
13. ROLLER MOTOR 2
20. WINDOW
20b. ELECTRODE HOUSING
57. TENSION SPRING
57a. TENSION SPRING MOUNT
58. ELECTRODE HOUSING BRACKET
59. FLEXIBLE GASKET
60. SLIDE TRACK
61. BASE SUPPORT
62. MOVABLE TABLE
67. AUGER MOTOR
71. INDIRECT DRIVE PULLEY
72. SHAFT DRIVE BELT
73. DRIVE SHAFT BEARING
74. DRIVE SHAFT
75. WIRE CONNECTOR
77. BLOWER
78. BLOWER OUTLET DUCT
79. CYCLONE SEPARATOR INLET
79a. CYCLONE SEPARATOR MOUNT
80. CYCLONE SEPARATOR
81. GAS RETURN DUCT
82. OUTLET CHUTE
83. GAS JETS

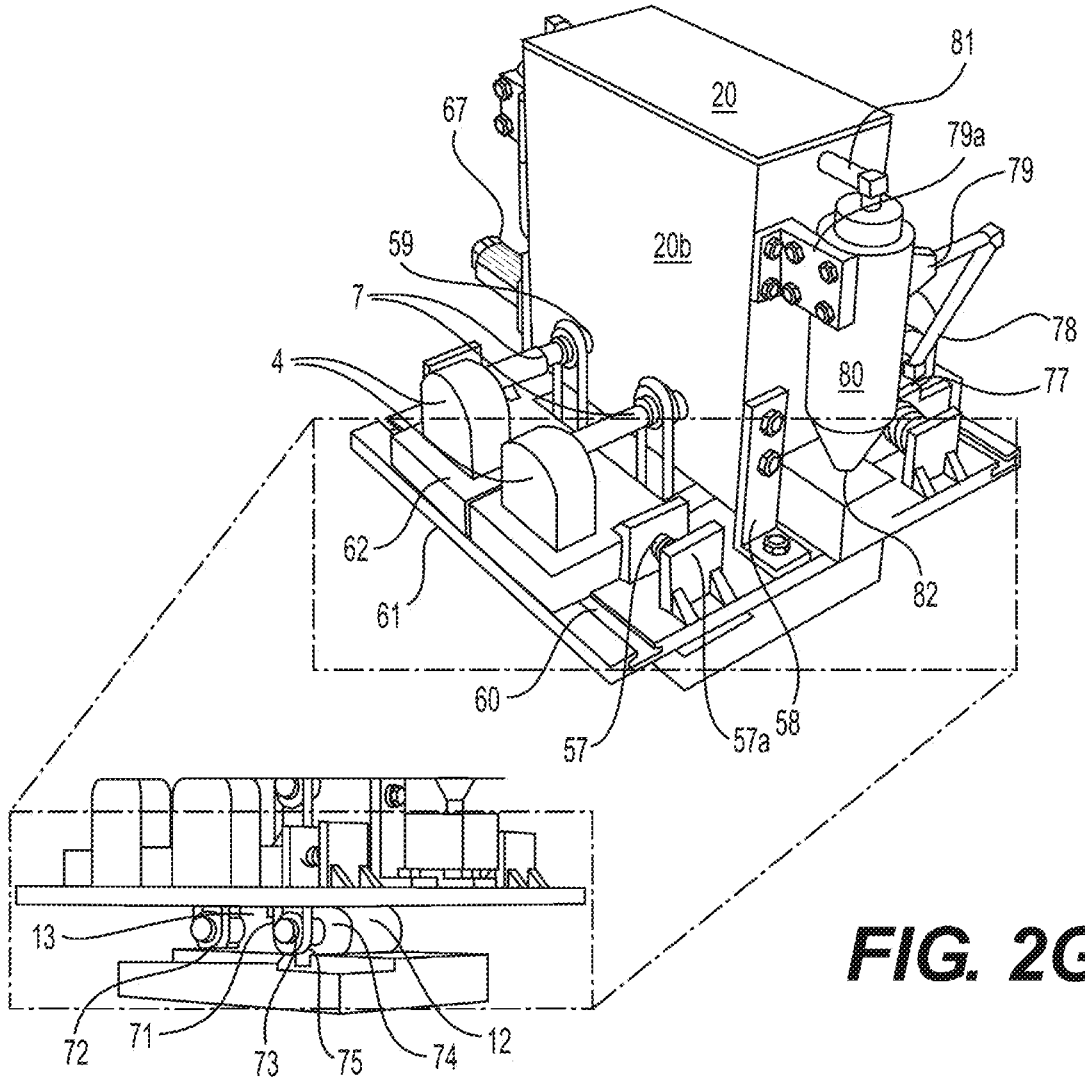

FIG. 2G1e3

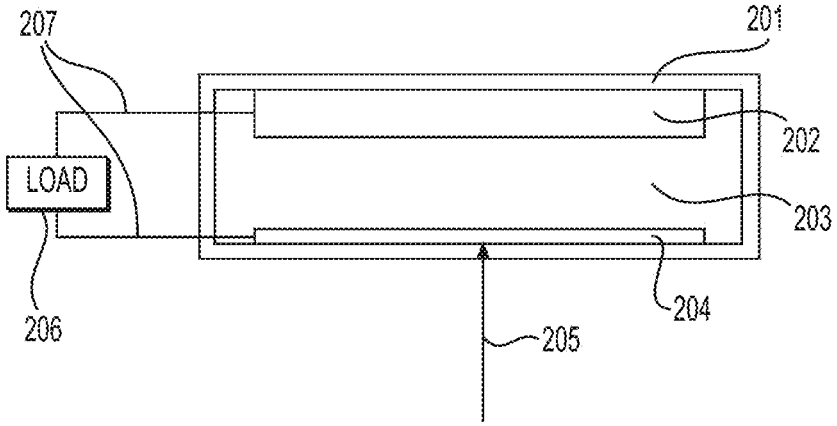

FIG. 2G1e4

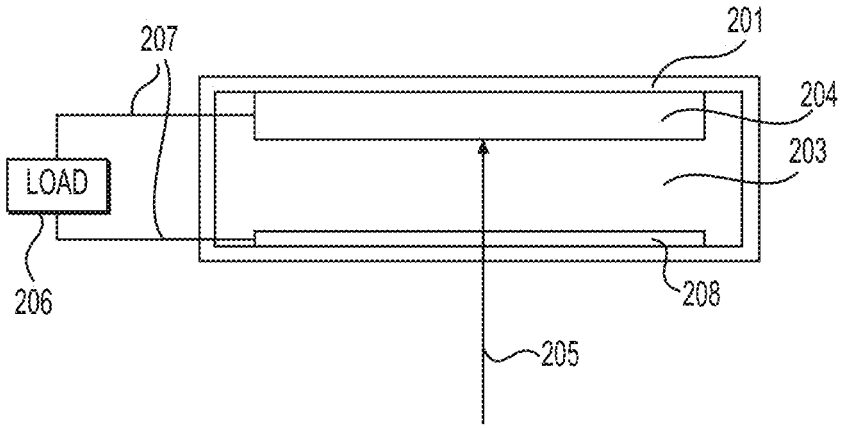

FIG. 2G1e5

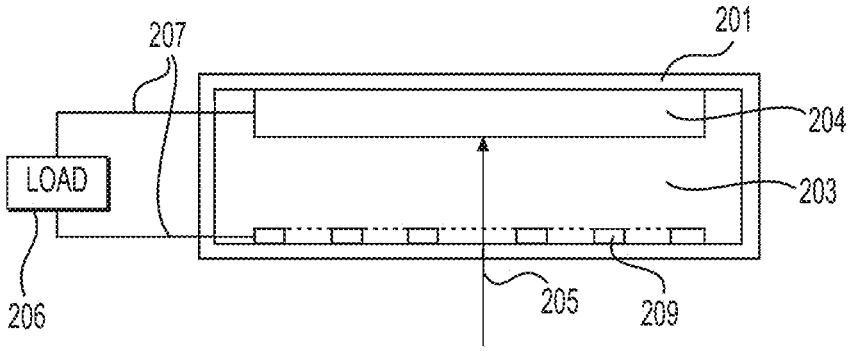

FIG. 2G1e6

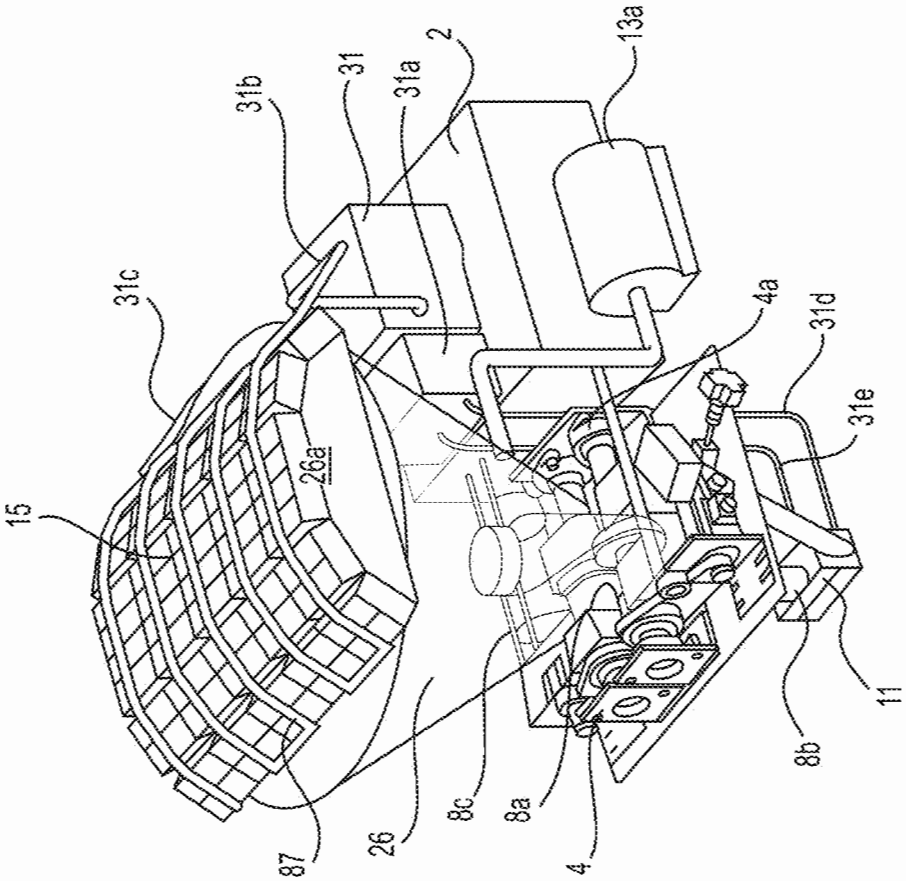

FIG. 2H1

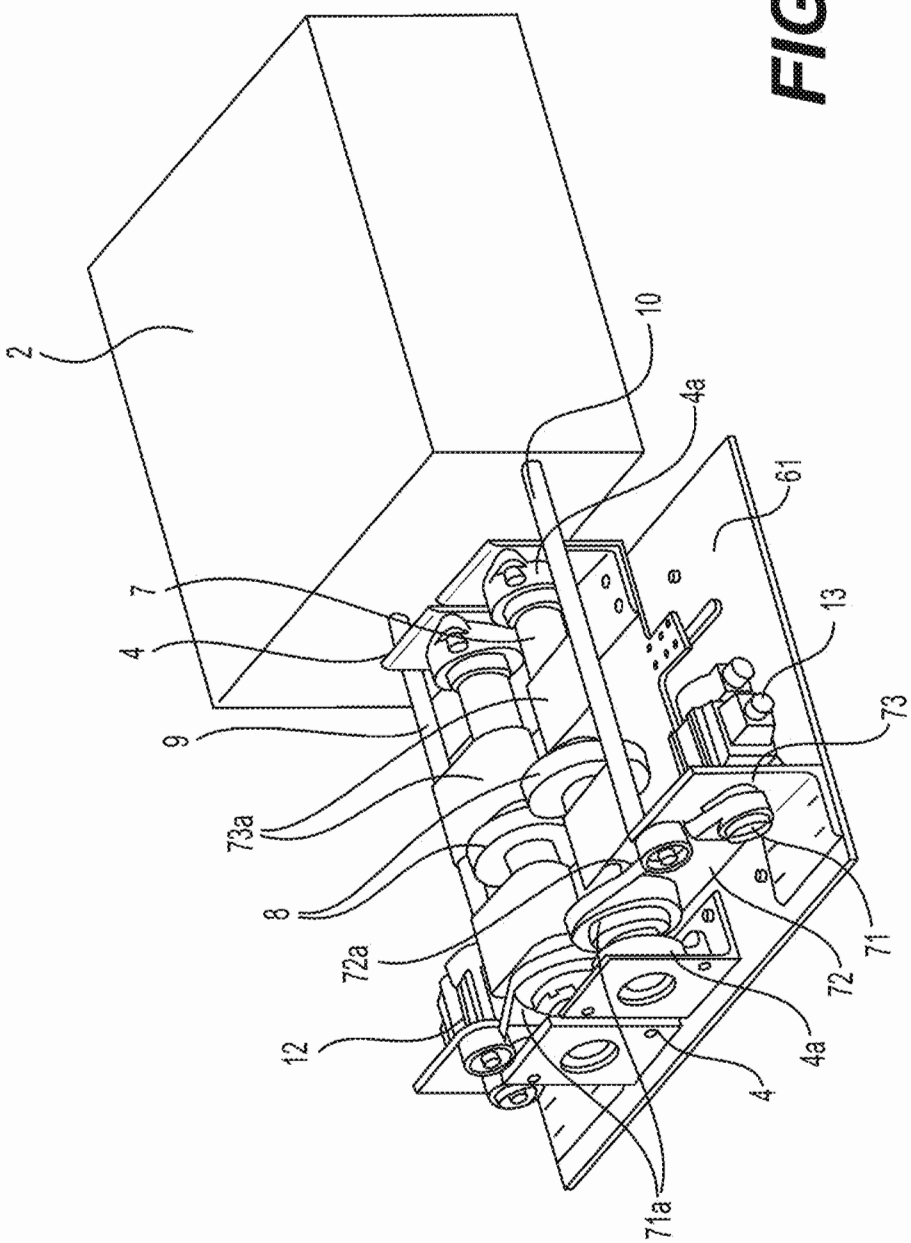

FIG. 2H2

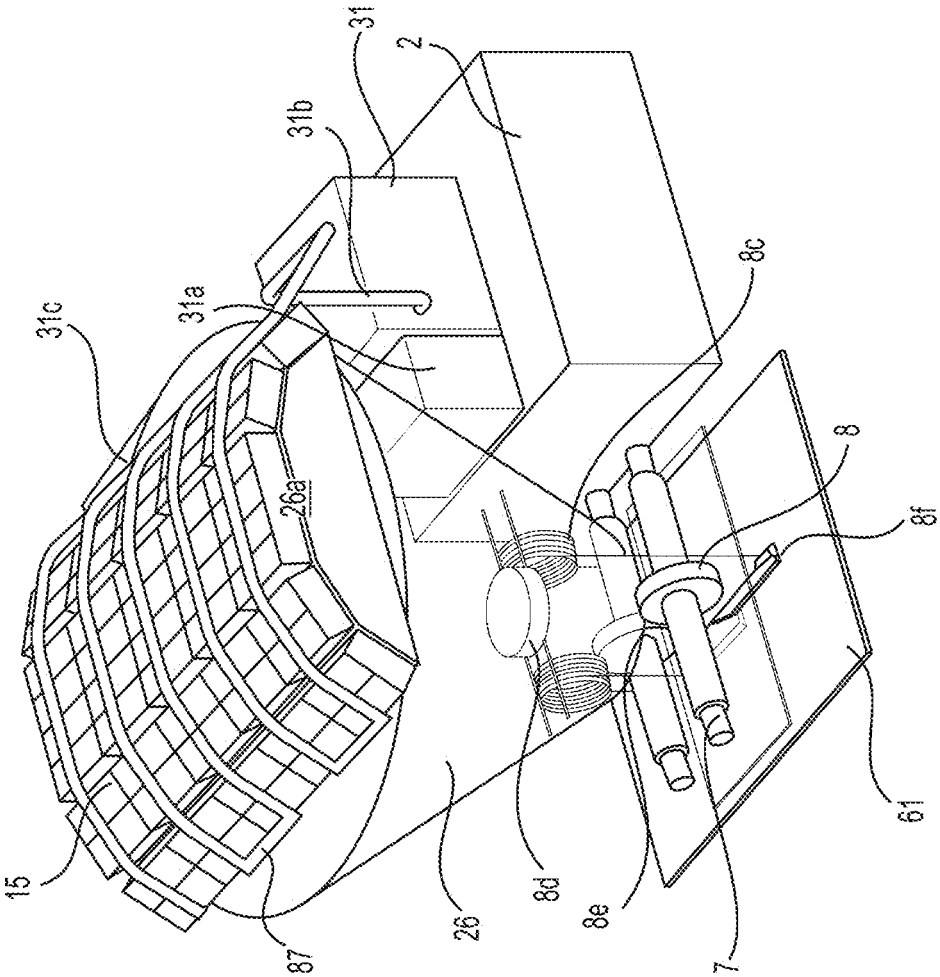

FIG. 2H3

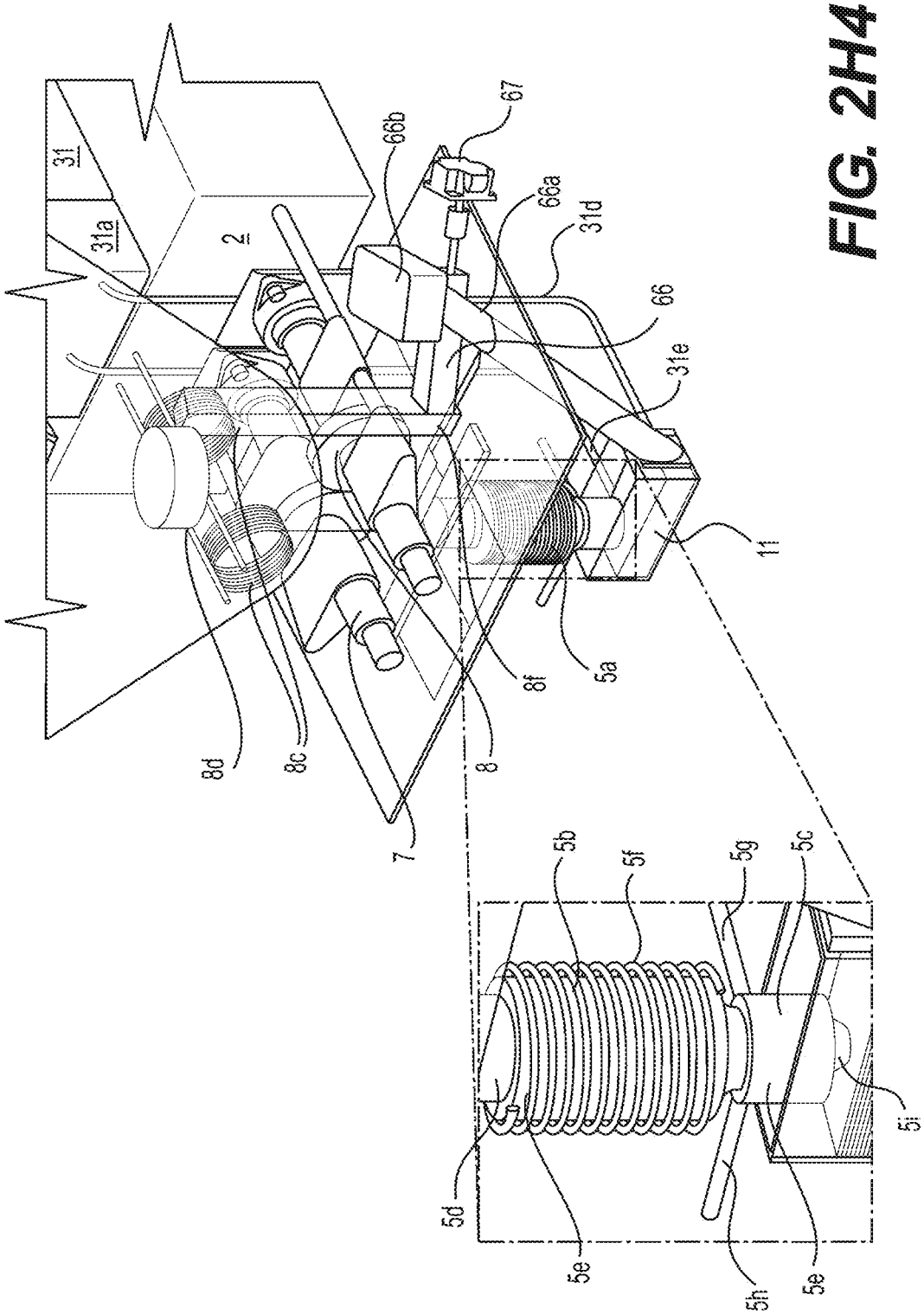
31
31a
2
66b
67
66a
31d
66
31e
11
8d
8c
7
8
8f
5a
5b
5f
5g
5c
5d
5e
5h
5e
5i

FIG. 2H4

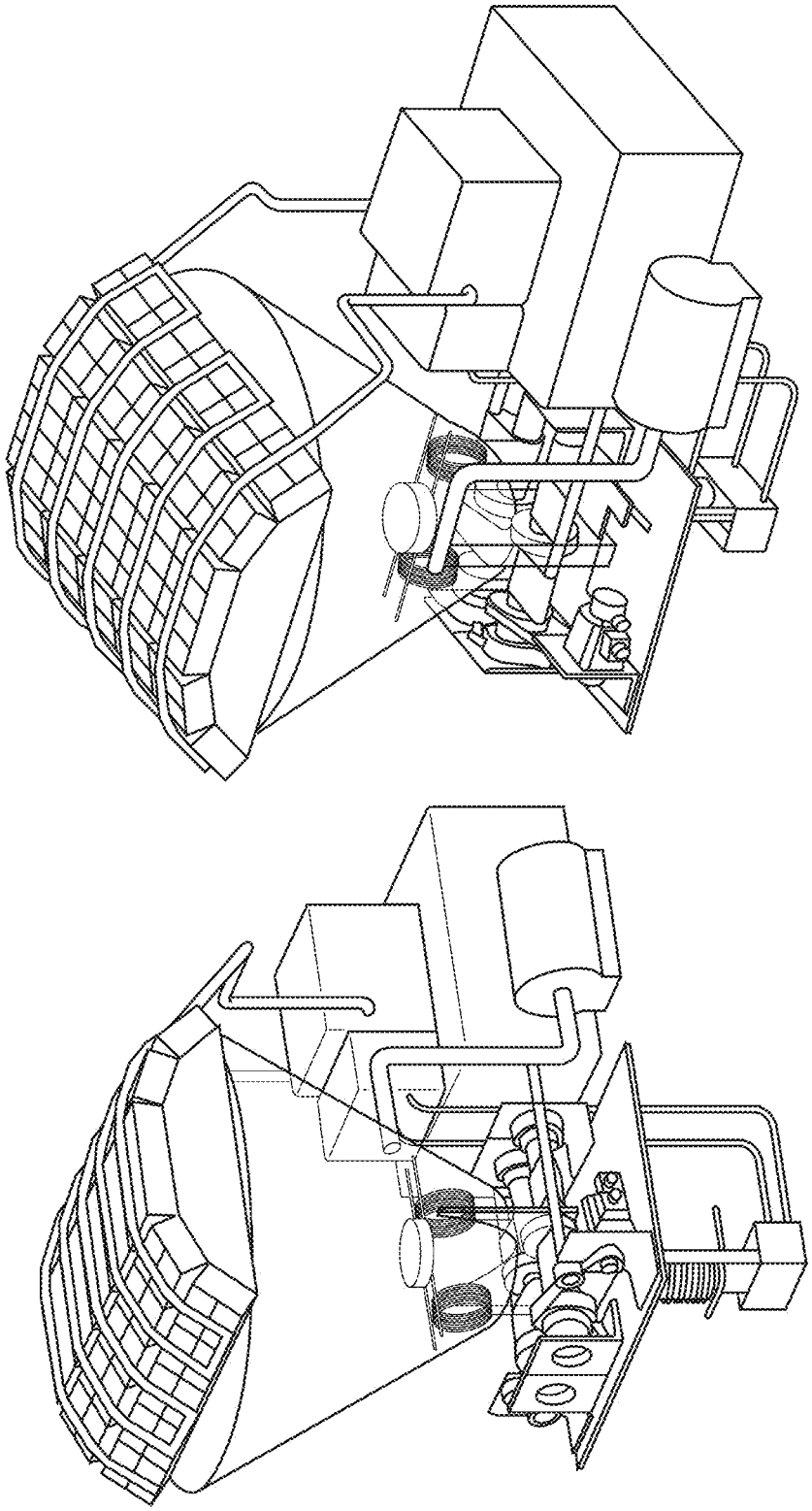

FIG. 2I1

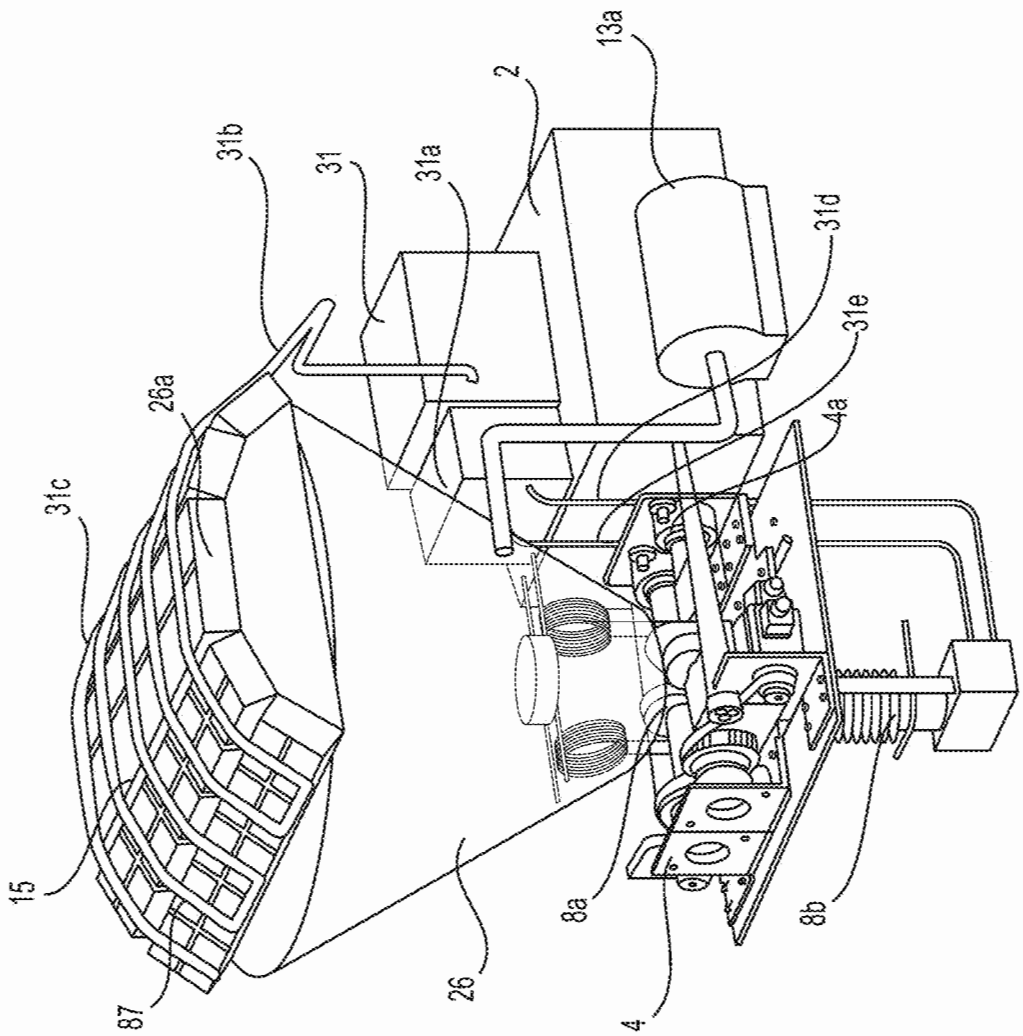

FIG. 2I2

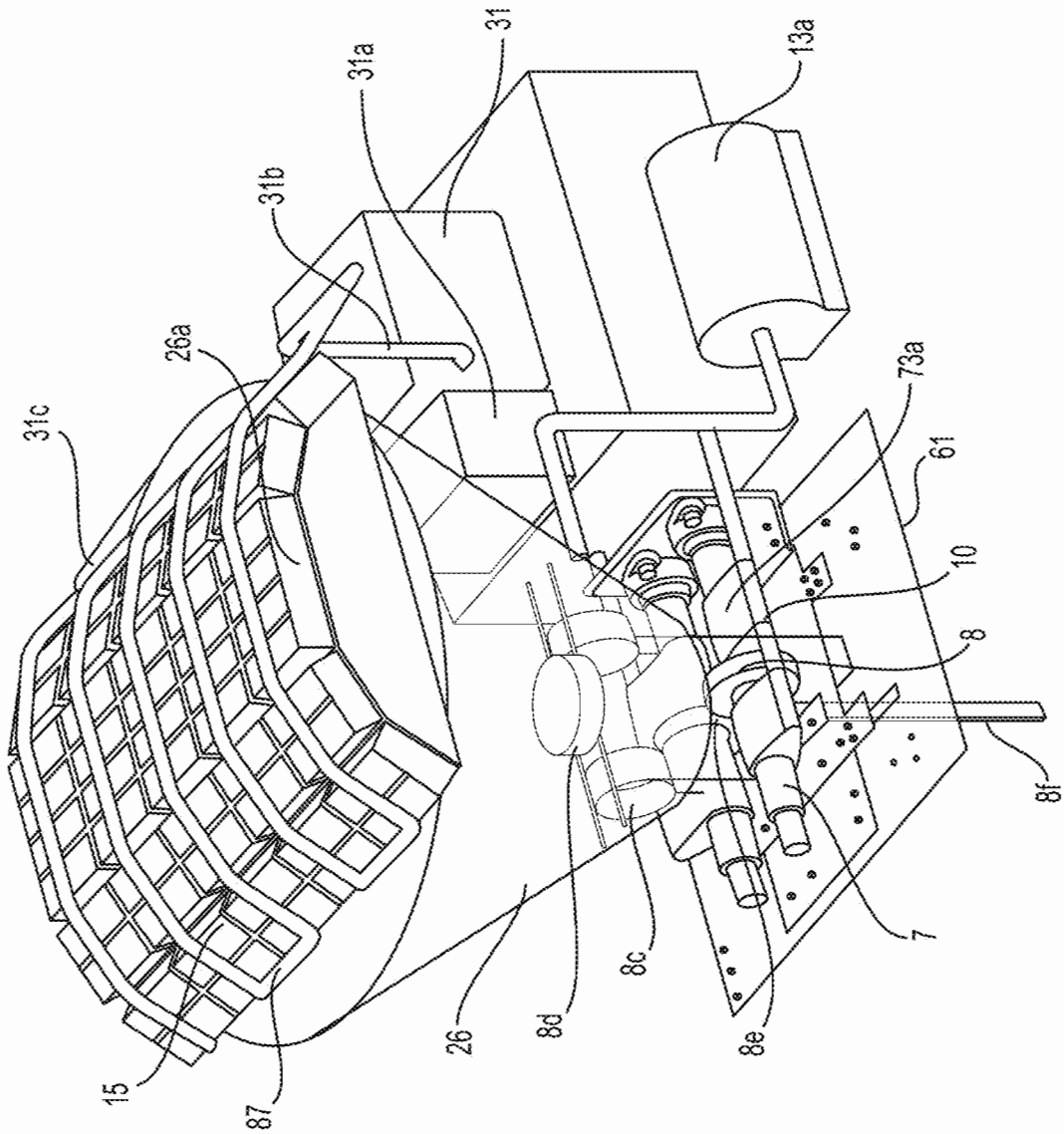

FIG. 2I3

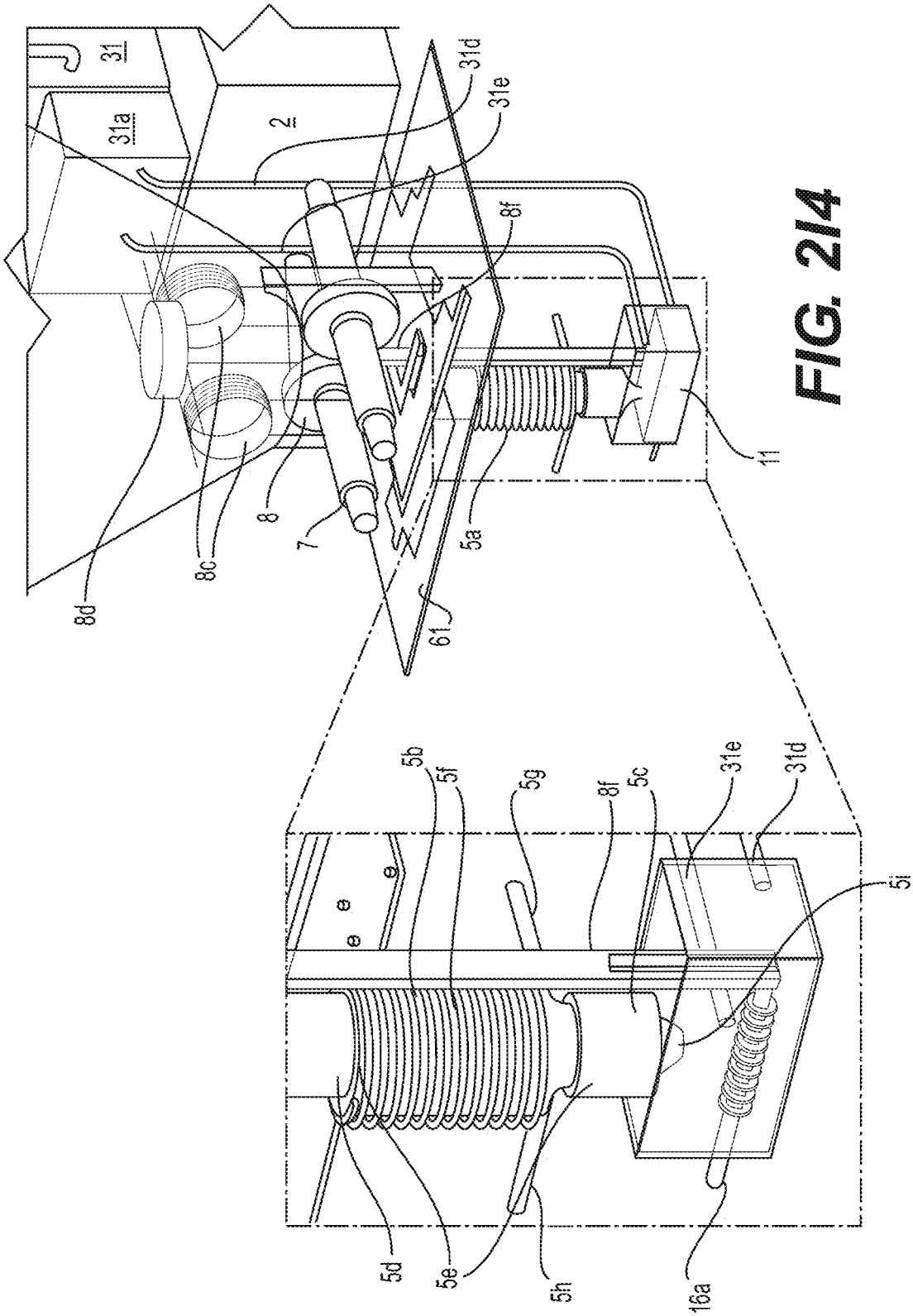
31
31a
2
31d
31e
8f
8d
8c
8
7
61
5a
11
5b
5f
5g
8f
5c
31e
31d
5i
5d
5e
5h
16a

FIG. 2I4

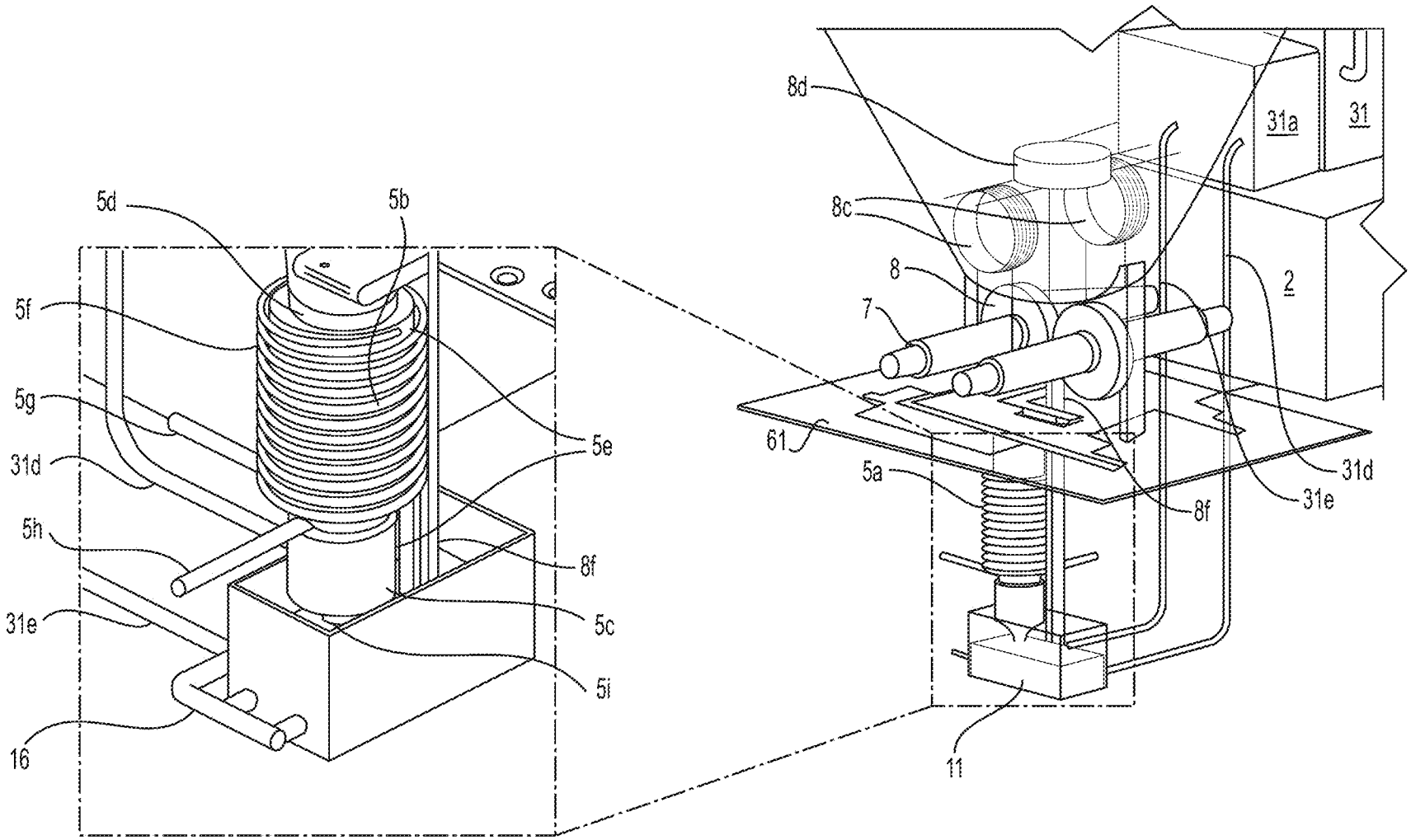
5d
5b
5f
5g
31d
5h
31e
16
5e
8f
5c
5i
8d
8c
8
7
61
5a
11
31a
31
2
31d
31e
8f

FIG. 215

2. SOURCE OF ELECTRICAL POWER
9. PIVOTING BUS BAR
17. WATER EJECTION PUMP
18. WATER SUCKING PUMP
19. WATER SUCKING LINE
67. SLURRY AGITATOR MOTOR
71. BOTTOM INDIRECT DRIVE PULLEY
71a. TOP INDIRECT DRIVE PULLEY
72. SHAFT DRIVE BELT
73. DRIVE SHAFT BEARING
74. DRIVE SHAFT
75. WIRE CONNECTOR
84. COOLANT INLET LINE
85. COOLANT OUTLET LINE
86. HEAT EXCHANGER, BOILER, TURBINE, GENERATOR
87. HEAT EXCHANGER

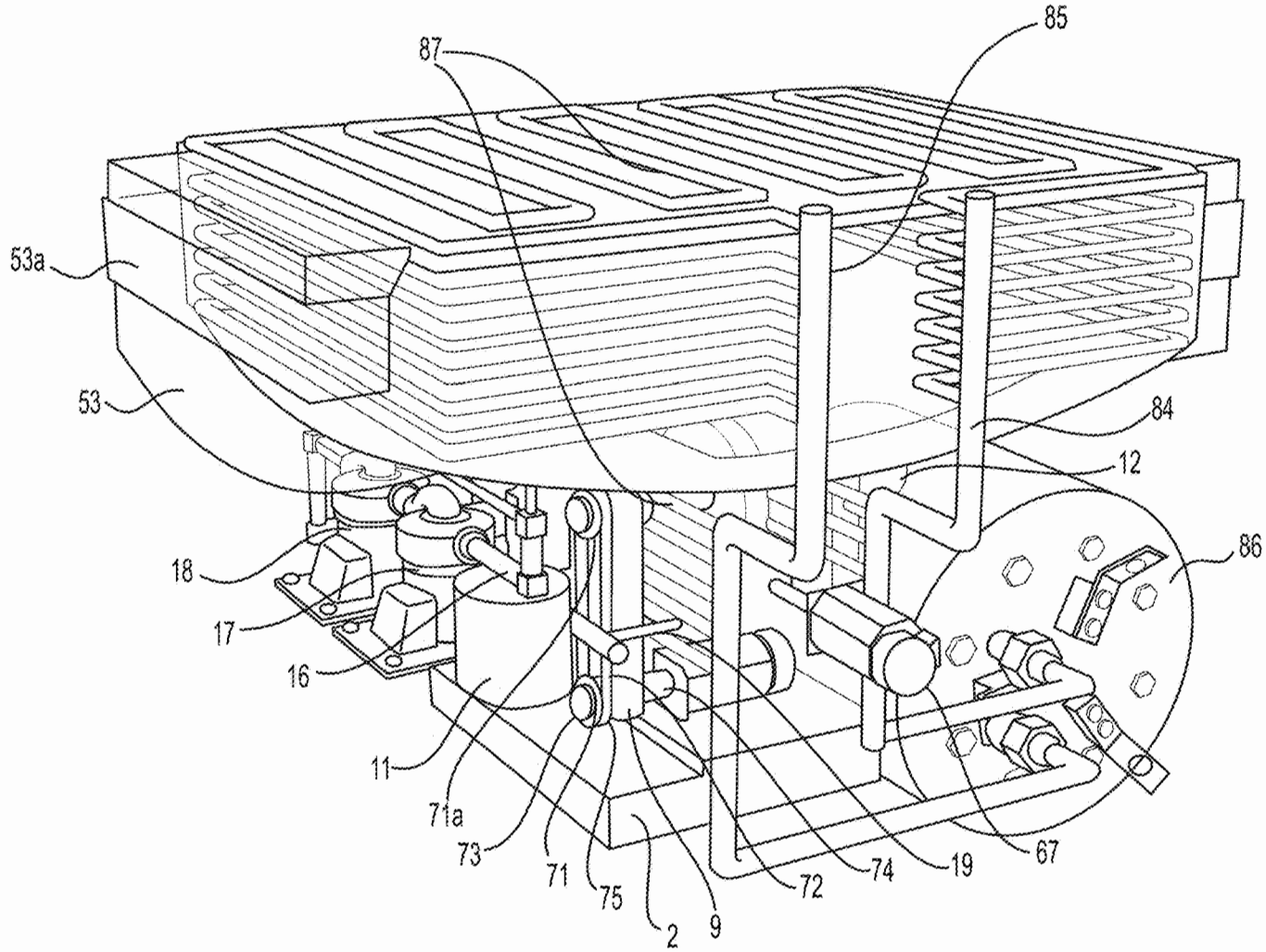

FIG. 2J

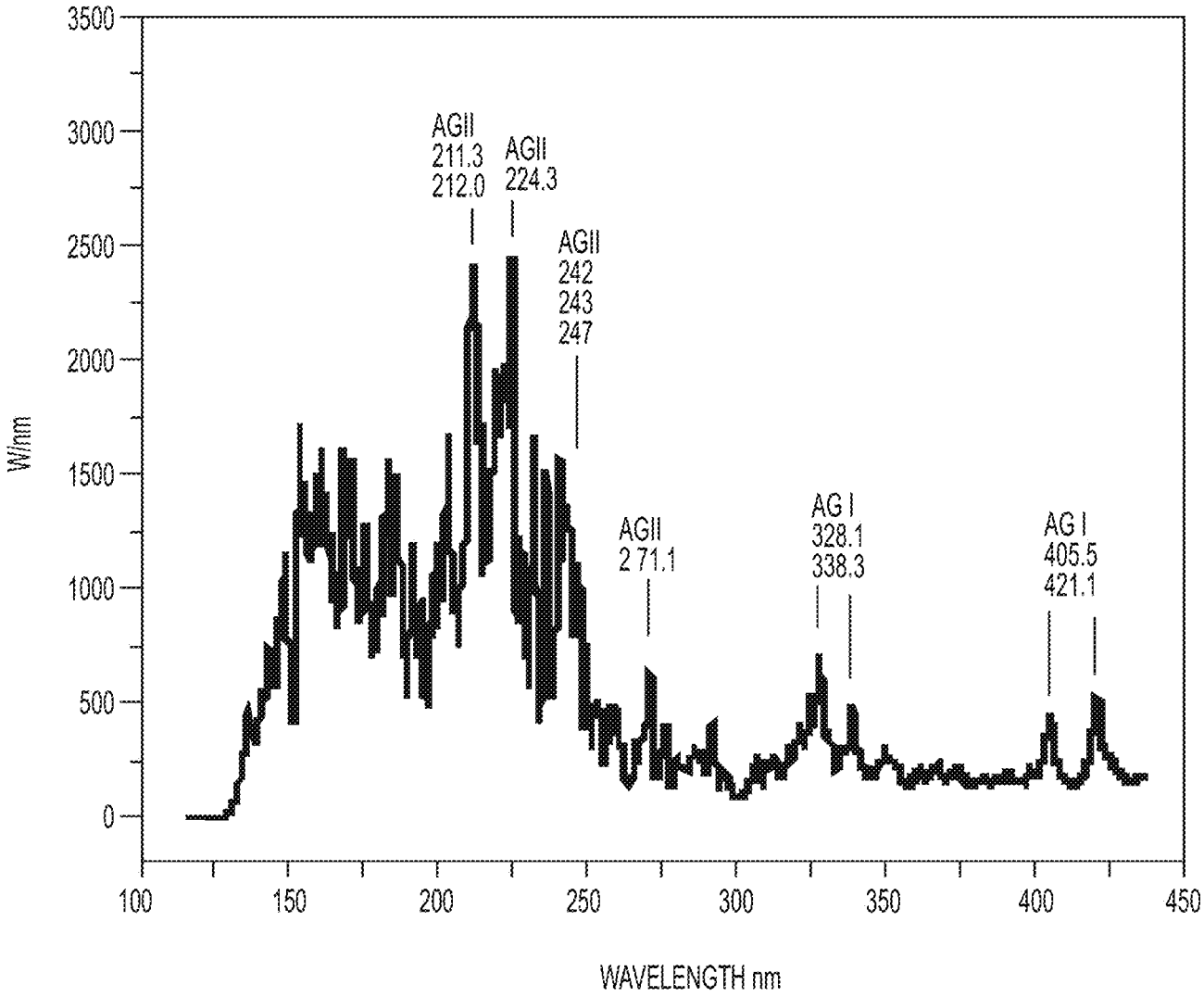
3500
3000
2500
2000
1500
1000
500
0
W/nm
AGII
211.3
212.0
AGII
224.3
AGII
242
243
247
AGII
2 71.1
AG I
328.1
338.3
AG I
405.5
421.1
100
150
200
250
300
350
400
450
WAVELENGTH nm

FIG. 3

1. CALORIMETER COVER
2. THERMISTOR
3. ELECTRODES
4. POSITVE PROBE CONNECTOR
5. NEGATIVE PROBE CONNECTOR
6. STIRRING ASSEMBLY
7. STIRRER DRIVE BELT
8. MOTOR PULLEY
9. MOTOR
10. MOTOR CONNECTOR
11. IMPELLER
12. HEAT FINS
13. ELECTRODE FEED-THROUGH
14. BOMB CELL
15. INSULATING FERRULE SEAL
16. SAMPLE FASTENING BOLT
17. FASTENER SWIVEL
18. SOLID FUEL
19. WATER BUCKET
20. BUCKET STAND
21. CALORIMETER JACKET

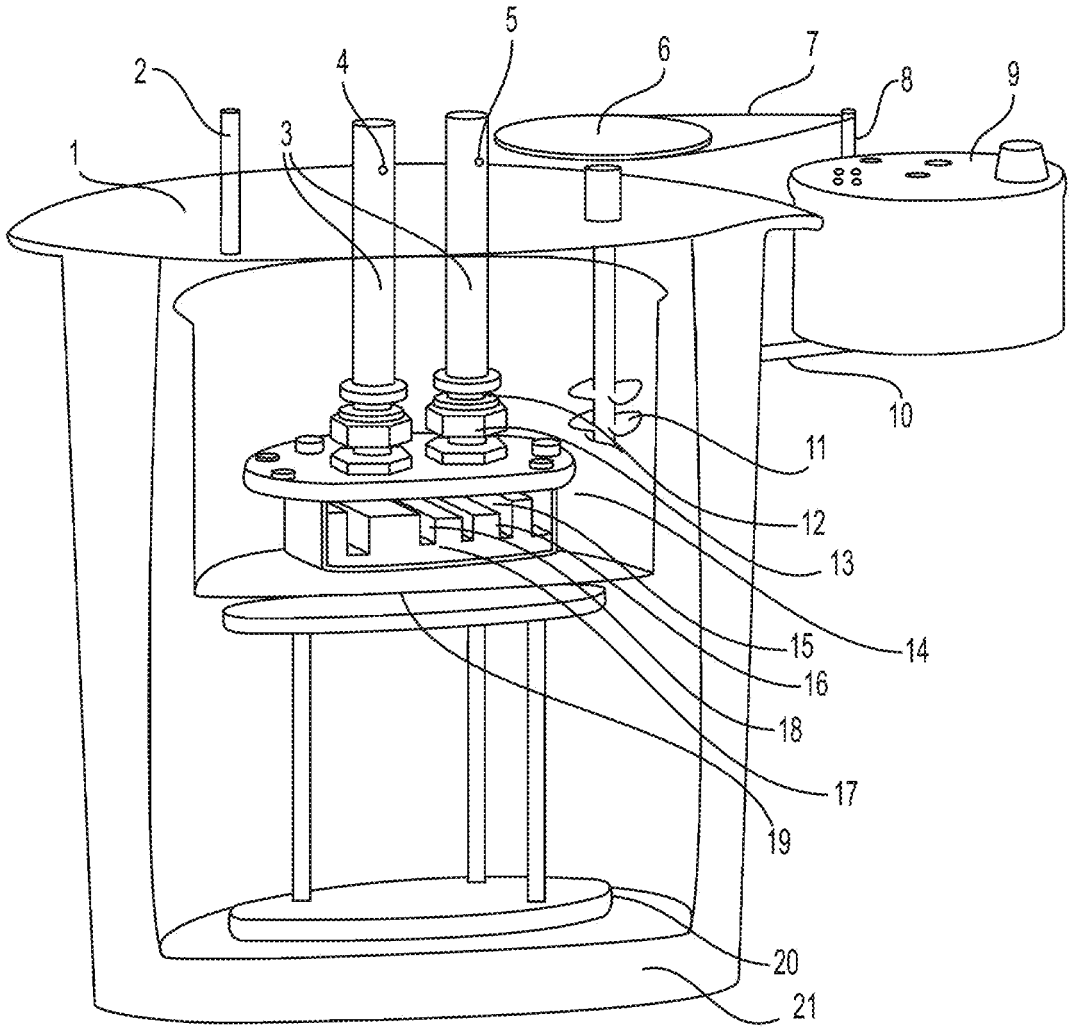

FIG. 4

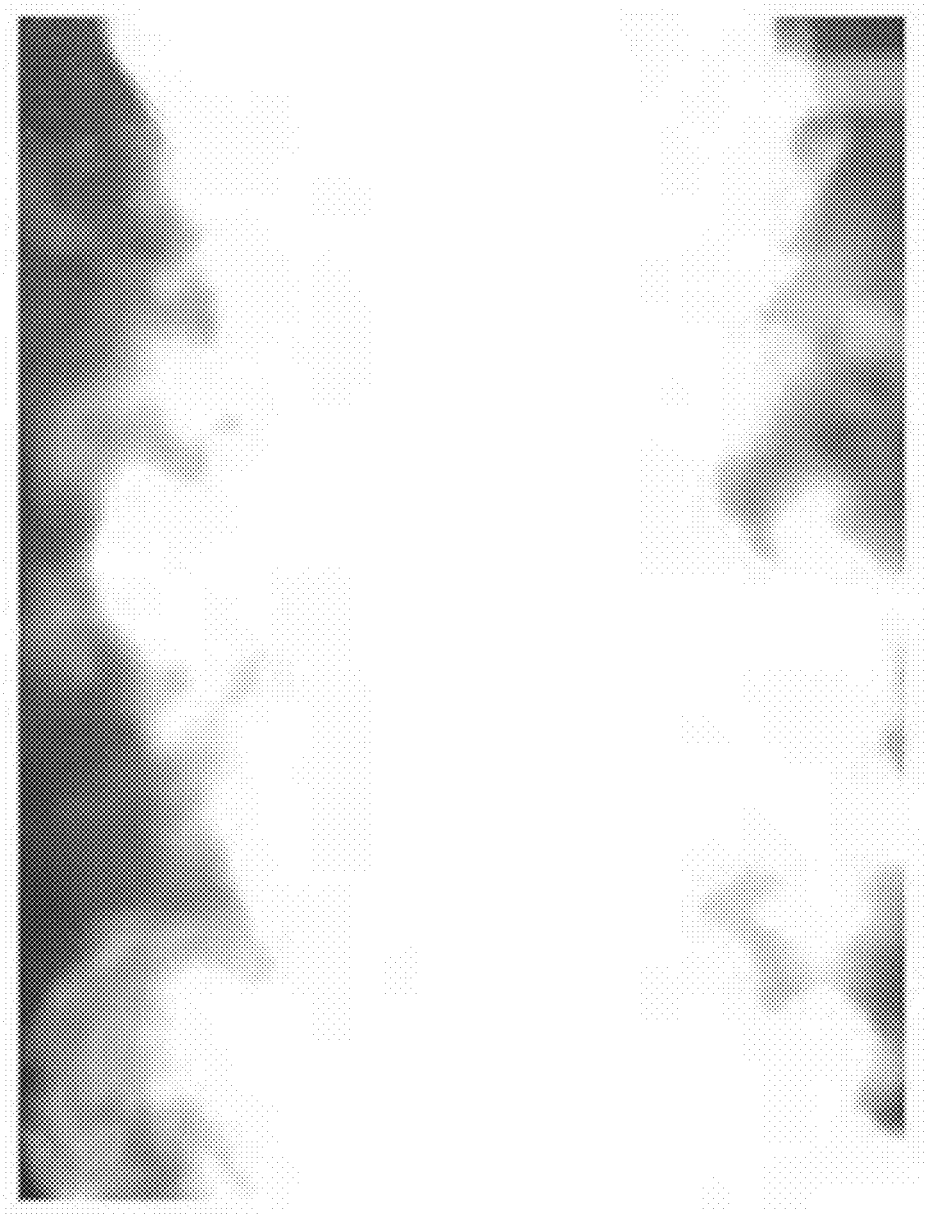

FIG. 5

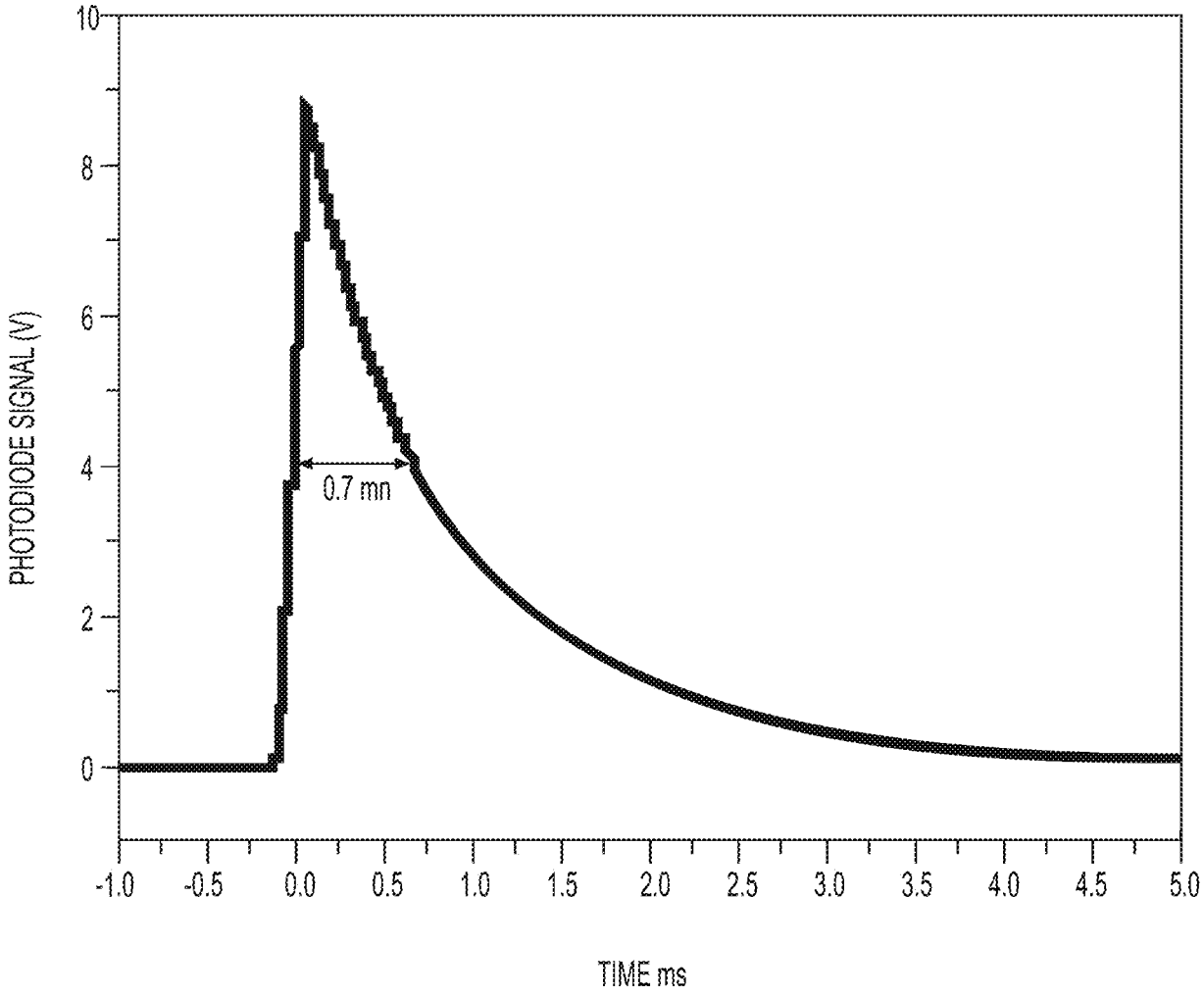
PHOTODIODE SIGNAL (V)
10
8
6
4
2
0
0.7 mn
-1.0
-0.5
0.0
0.5
1.0
1.5
2.0
2.5
3.0
3.5
4.0
4.5
5.0
TIME ms

FIG. 6

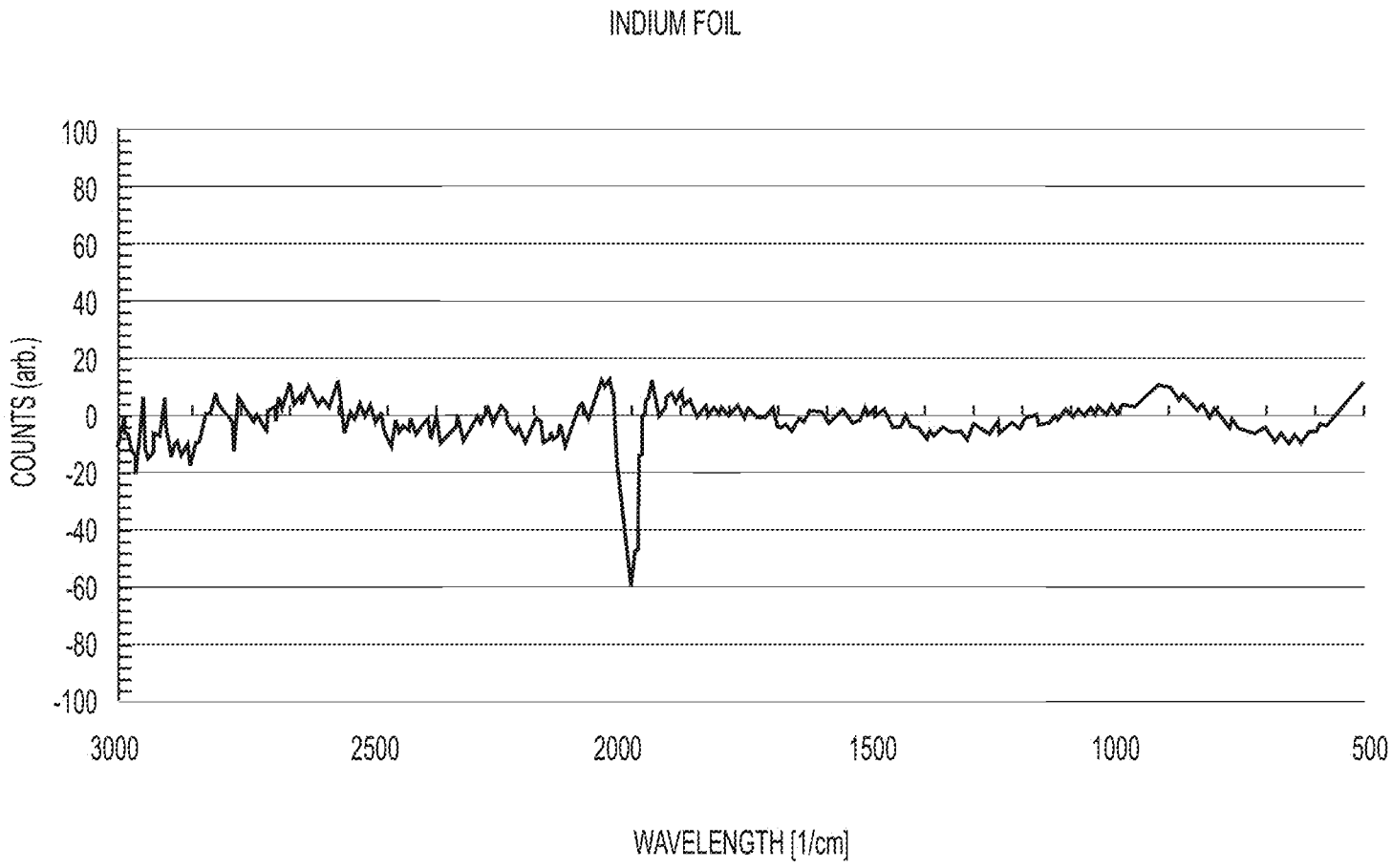
INDIUM FOIL
COUNTS (arb.)
100
80
60
40
20
0
-20
-40
-60
-80
-100
3000
2500
2000
1500
1000
500
WAVELENGTH [1/cm]

FIG. 7


100
80
60
40
20
0
-20
-40
-60
-80
-100
COUNTS [arb.]
3000
2500
2000
1500
1000
500
WAVELENGTH [1/cm]

FIG. 8

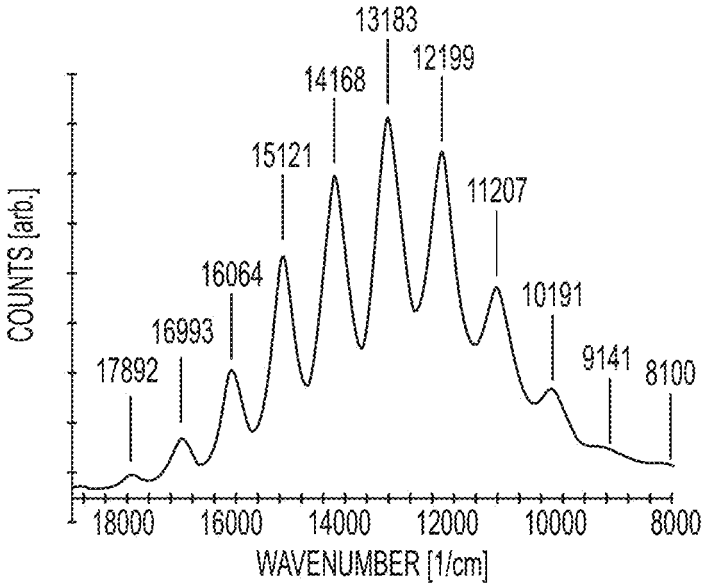
13183
12199
14168
15121
11207
16064
10191
16993
9141
8100
17892
COUNTS [arb.]
18000
16000
14000
12000
10000
8000
WAVENUMBER [1/cm]

FIG. 9

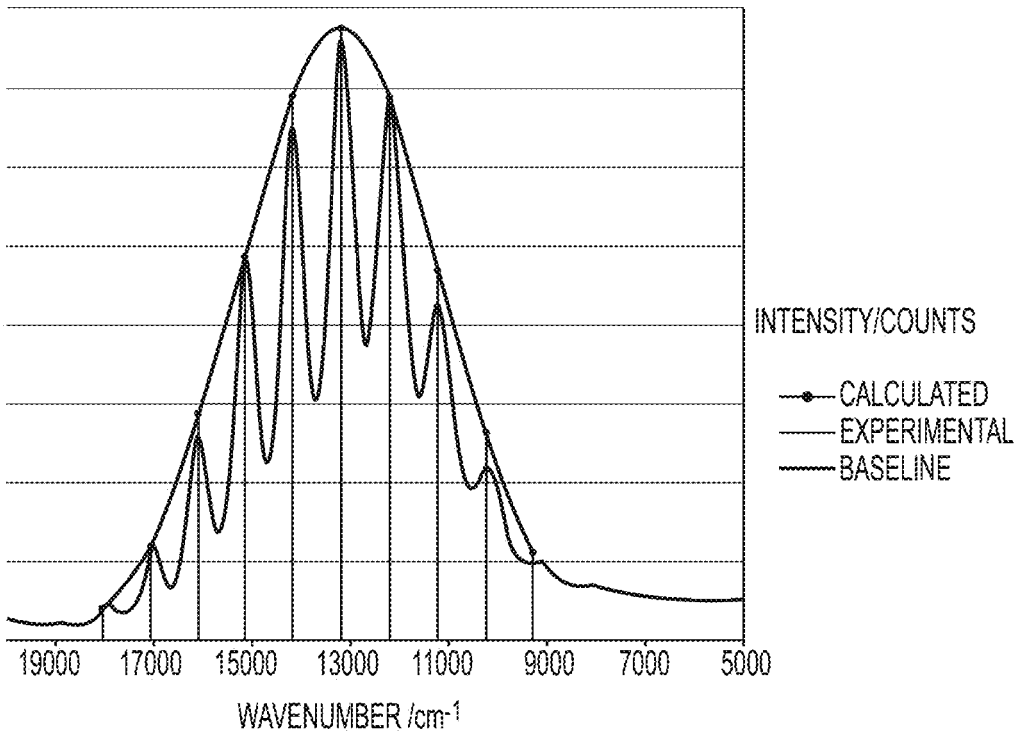
INTENSITY/COUNTS
CALCULATED
EXPERIMENTAL
BASELINE
19000
17000
15000
13000
11000
9000
7000
5000
WAVENUMBER /cm-1

FIG. 10

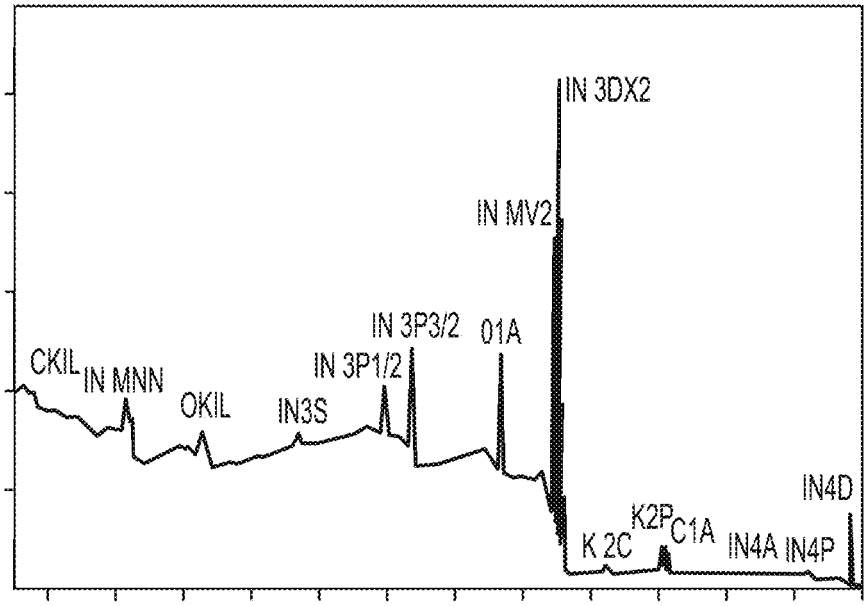

FIG. 11A

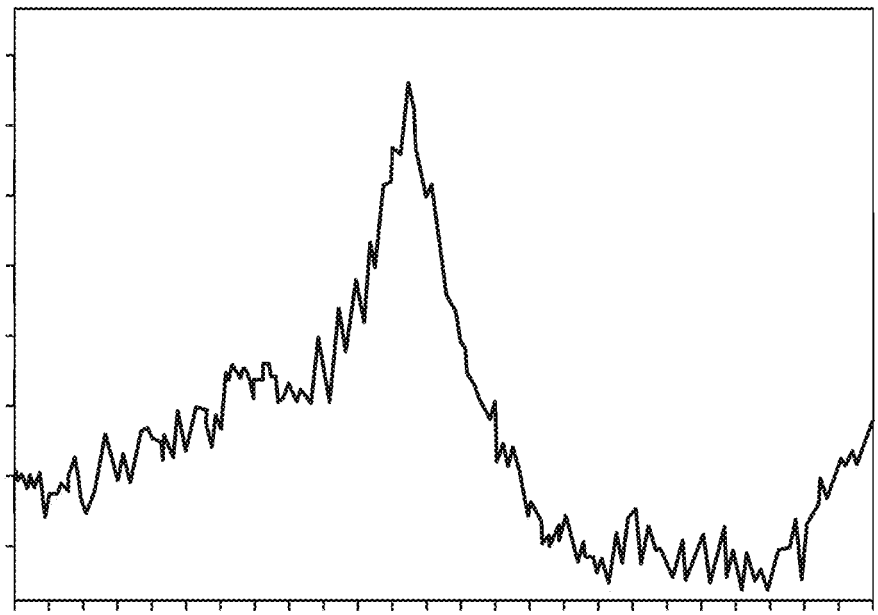

FIG. 11B

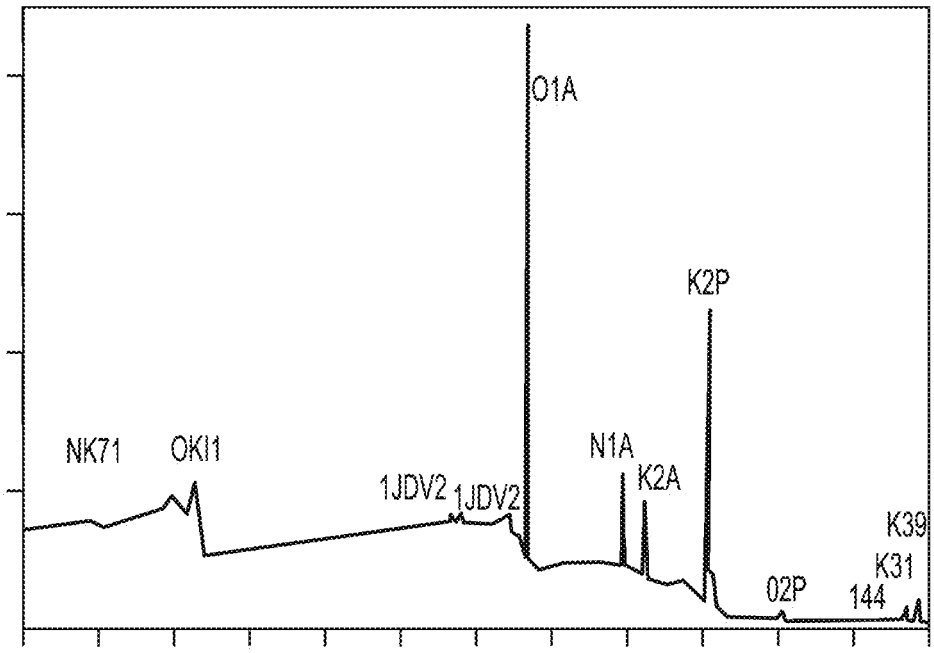

FIG. 12A

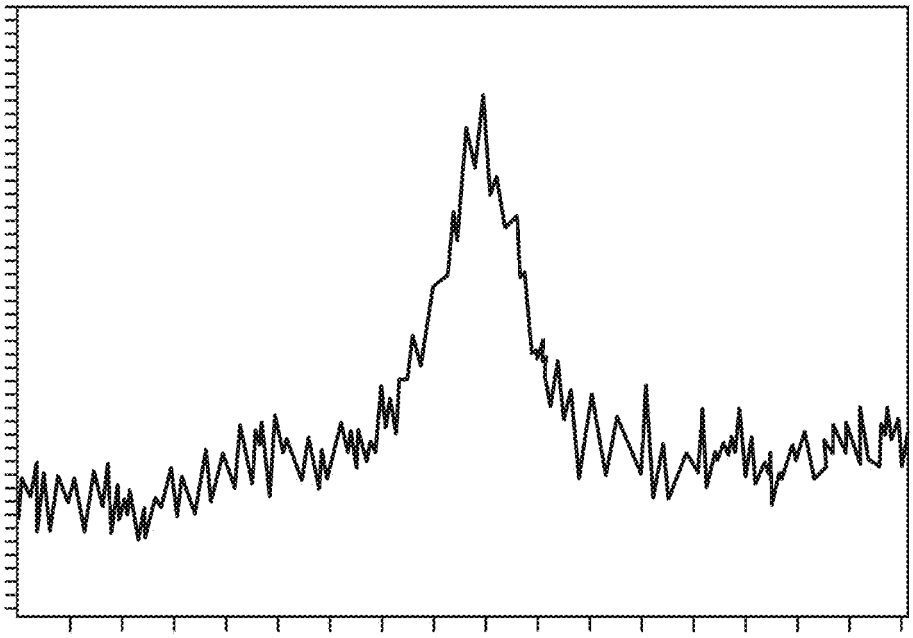

FIG. 12B

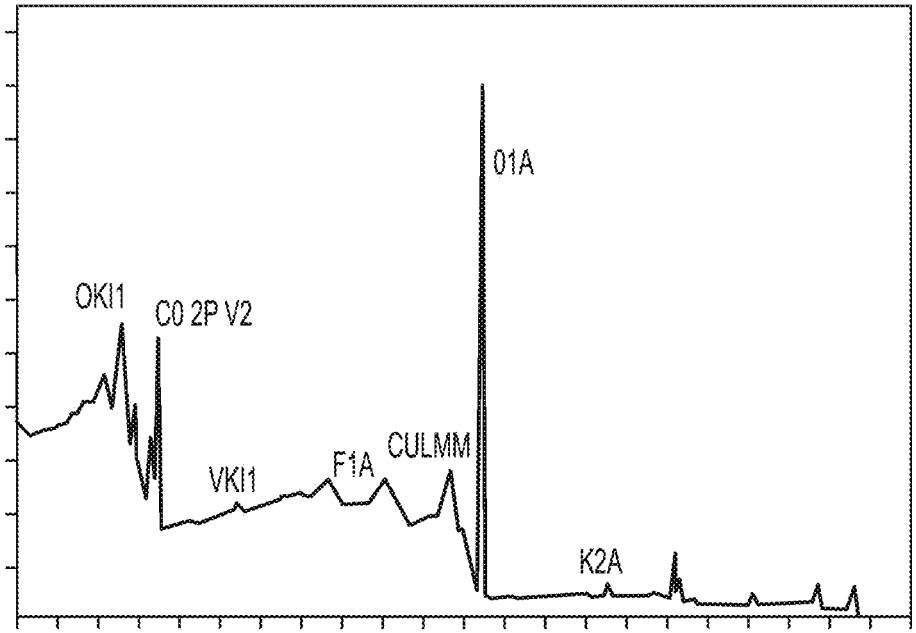

FIG. 13A

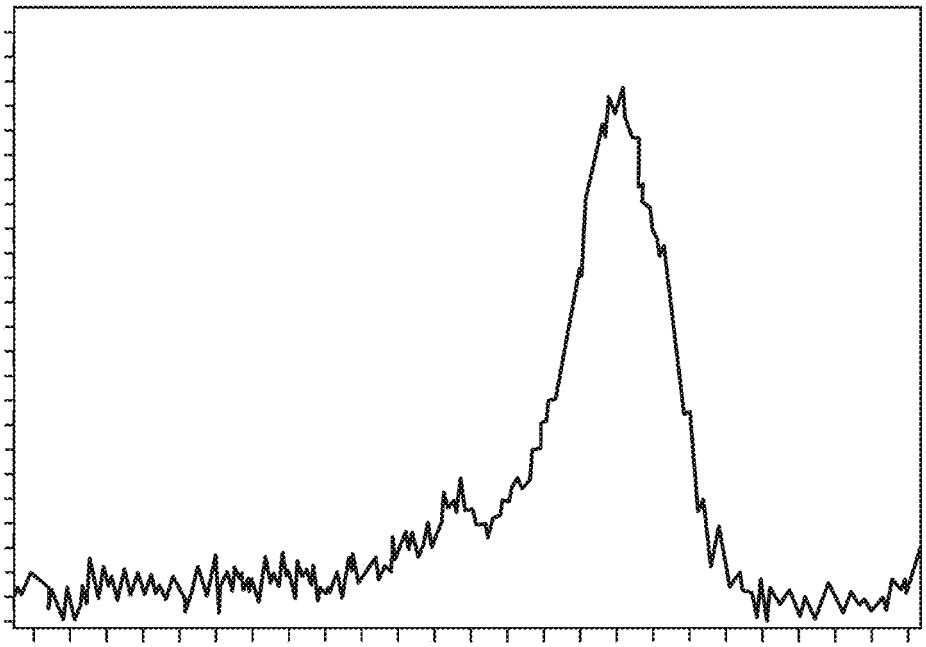

FIG. 13B

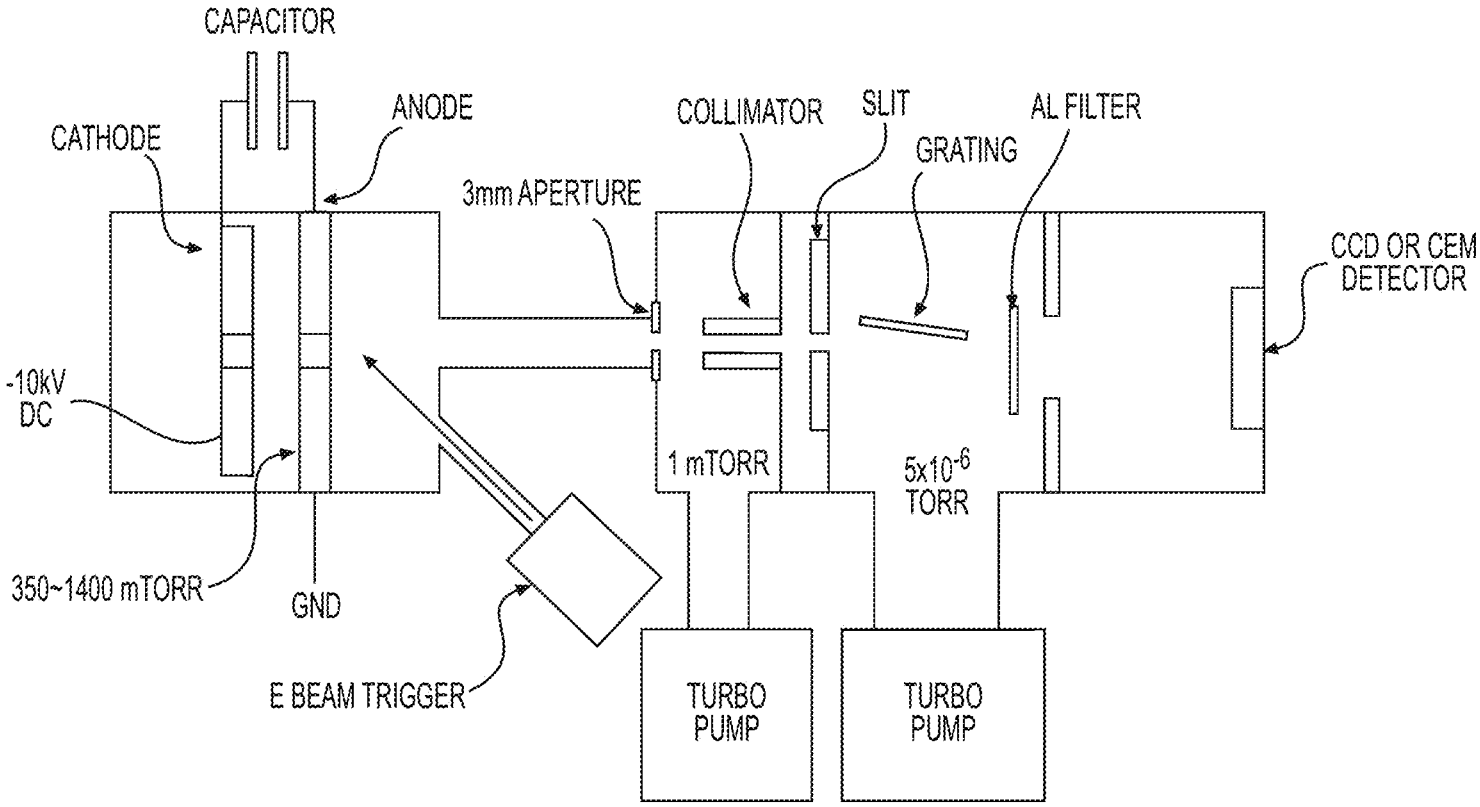
CAPACITOR
CATHODE
ANODE
3mm APERTURE
COLLIMATOR
SLIT
GRATING
AL FILTER
CCD OR CEM DETECTOR
-10kV DC
1 mTORR
5x10-6 TORR
350~1400 mTORR
GND
E BEAM TRIGGER
TURBO PUMP
TURBO PUMP

FIG. 14

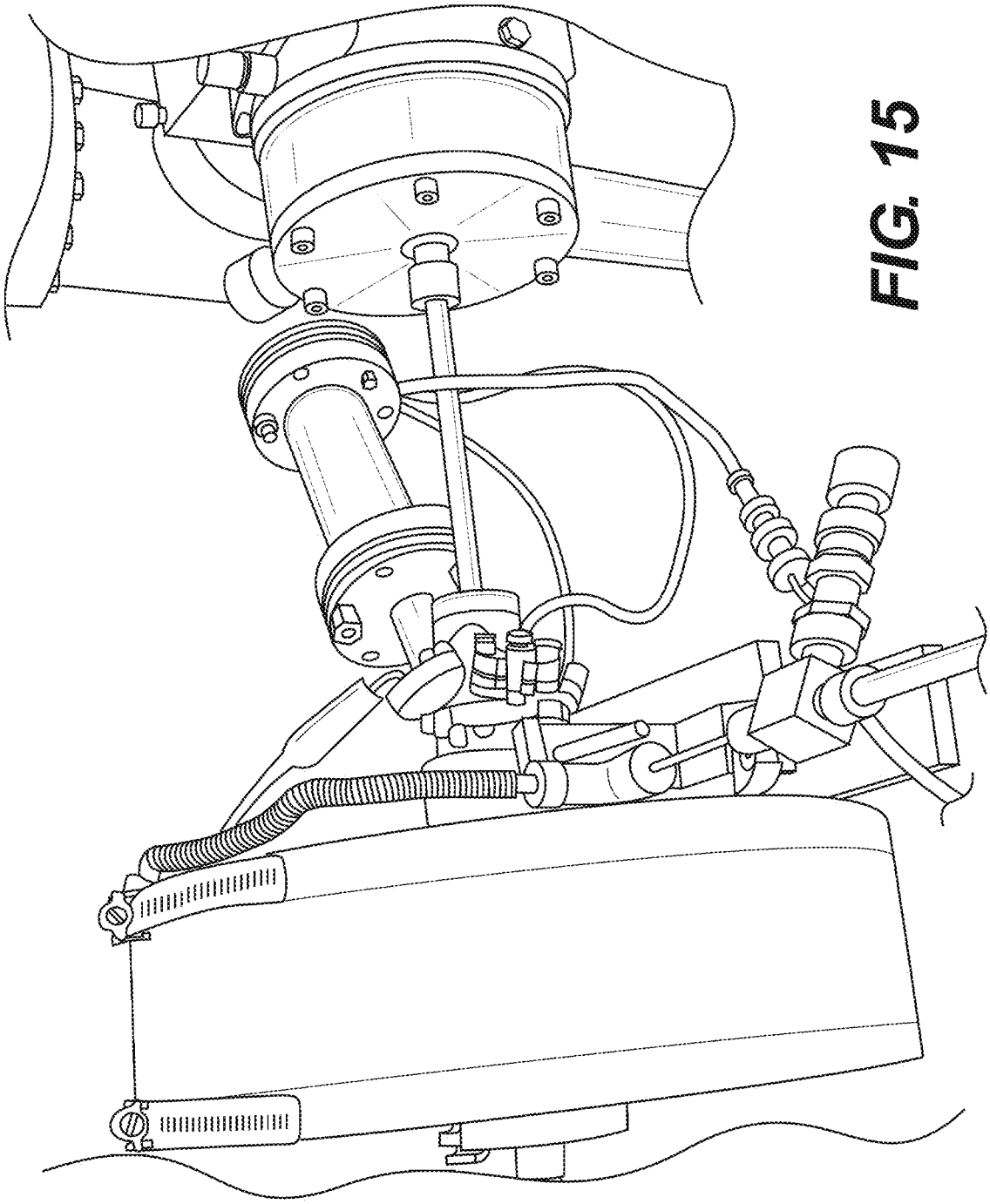

FIG. 15

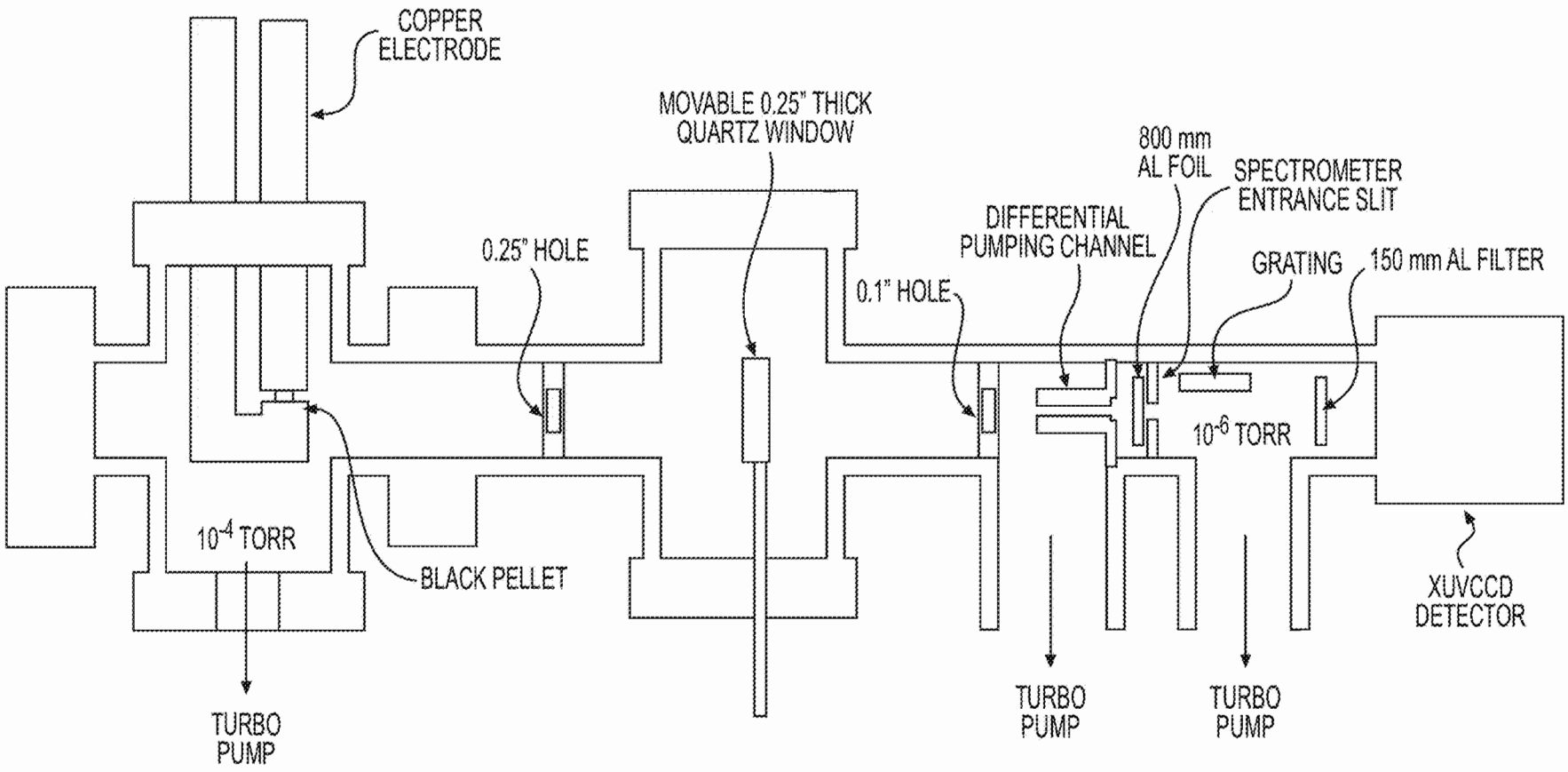
COPPER ELECTRODE
MOVABLE 0.25" THICK QUARTZ WINDOW
800 mm AL FOIL
SPECTROMETER ENTRANCE SLIT
DIFFERENTIAL PUMPING CHANNEL
0.25" HOLE
GRATING
150 mm AL FILTER
0.1" HOLE
10^{-6} TORR
10^{-4} TORR
BLACK PELLET
XUVCCD DETECTOR
TURBO PUMP
TURBO PUMP
TURBO PUMP

FIG. 16

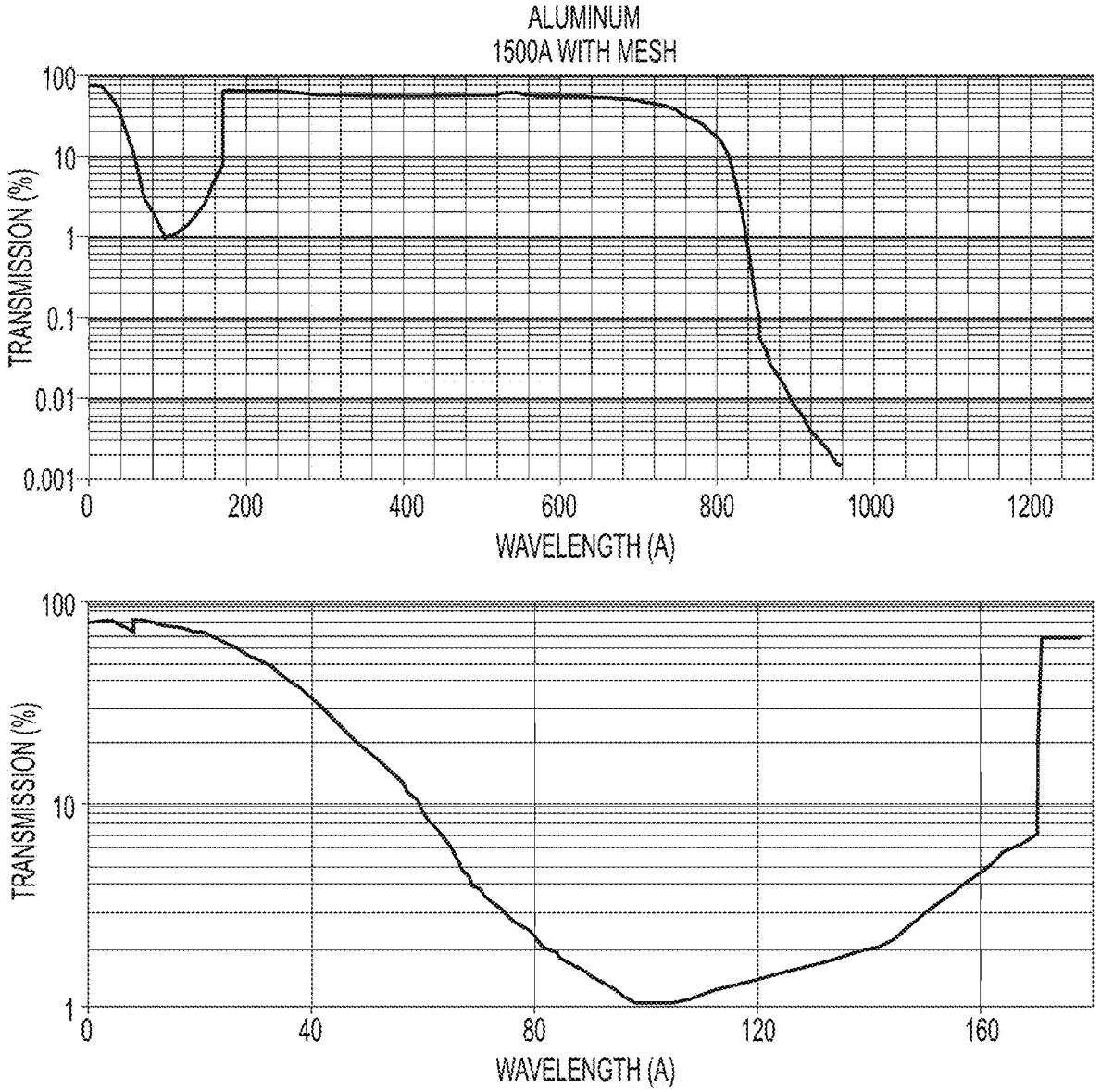
ALUMINUM
1500A WITH MESH
TRANSMISSION (%)
100
10
1
0.1
0.01
0.001
0
200
400
600
800
1000
1200
WAVELENGTH (A)
TRANSMISSION (%)
100
10
1
0
40
80
120
160
WAVELENGTH (A)

FIG. 17A

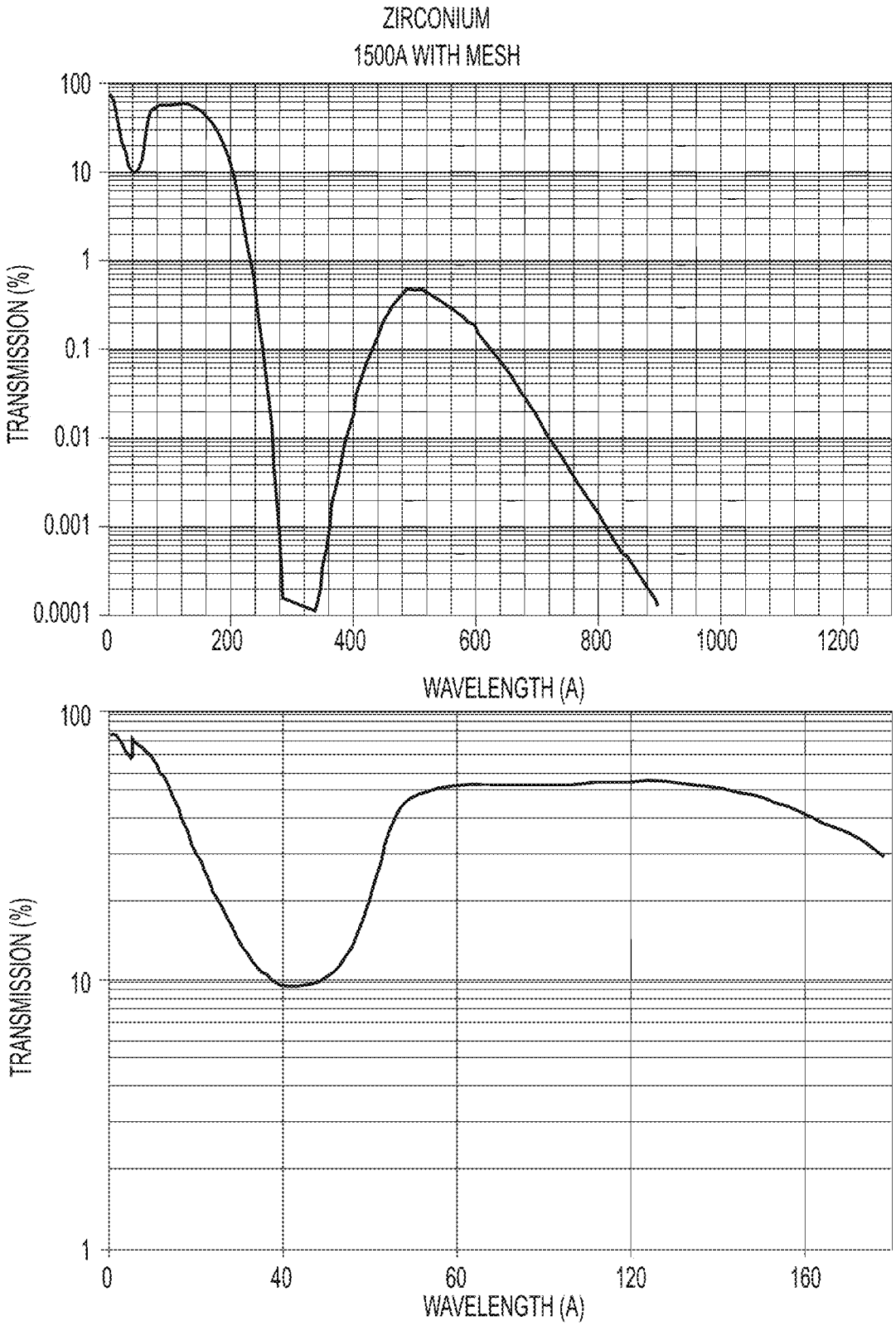
ZIRCONIUM
1500A WITH MESH
TRANSMISSION (%)
100
10
1
0.1
0.01
0.001
0.0001
0
200
400
600
800
1000
1200
WAVELENGTH (A)
TRANSMISSION (%)
100
10
1
0
40
60
120
160
WAVELENGTH (A)

FIG. 17B

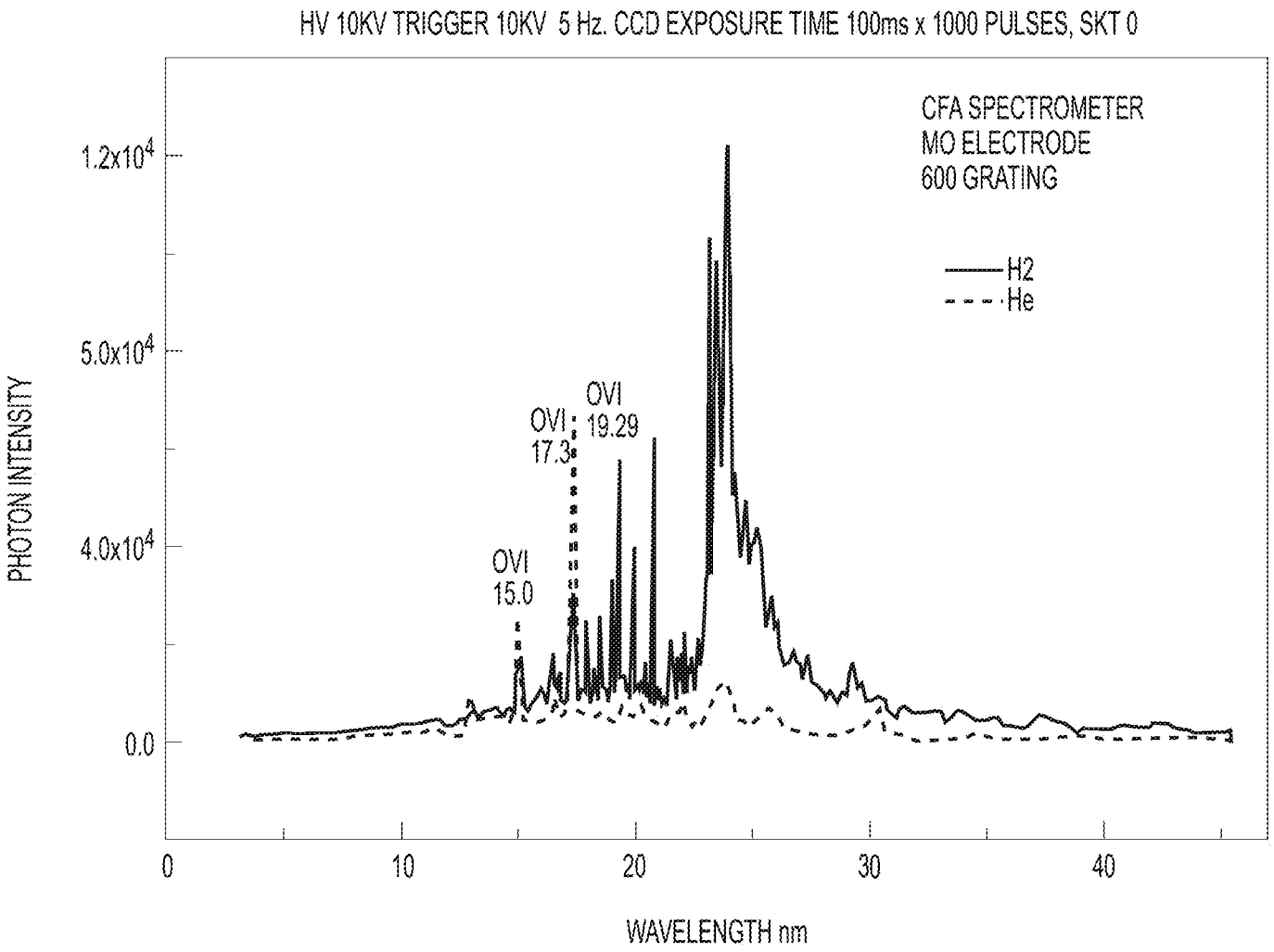
HV 10KV TRIGGER 10KV 5 Hz. CCD EXPOSURE TIME 100ms x 1000 PULSES, SKT 0
CFA SPECTROMETER
MO ELECTRODE
600 GRATING
H2
He
OVI
15.0
OVI
17.3
OVI
19.29
PHOTON INTENSITY
1.2x10^4
5.0x10^4
4.0x10^4
0.0
0
10
20
30
40
WAVELENGTH nm

FIG. 18A

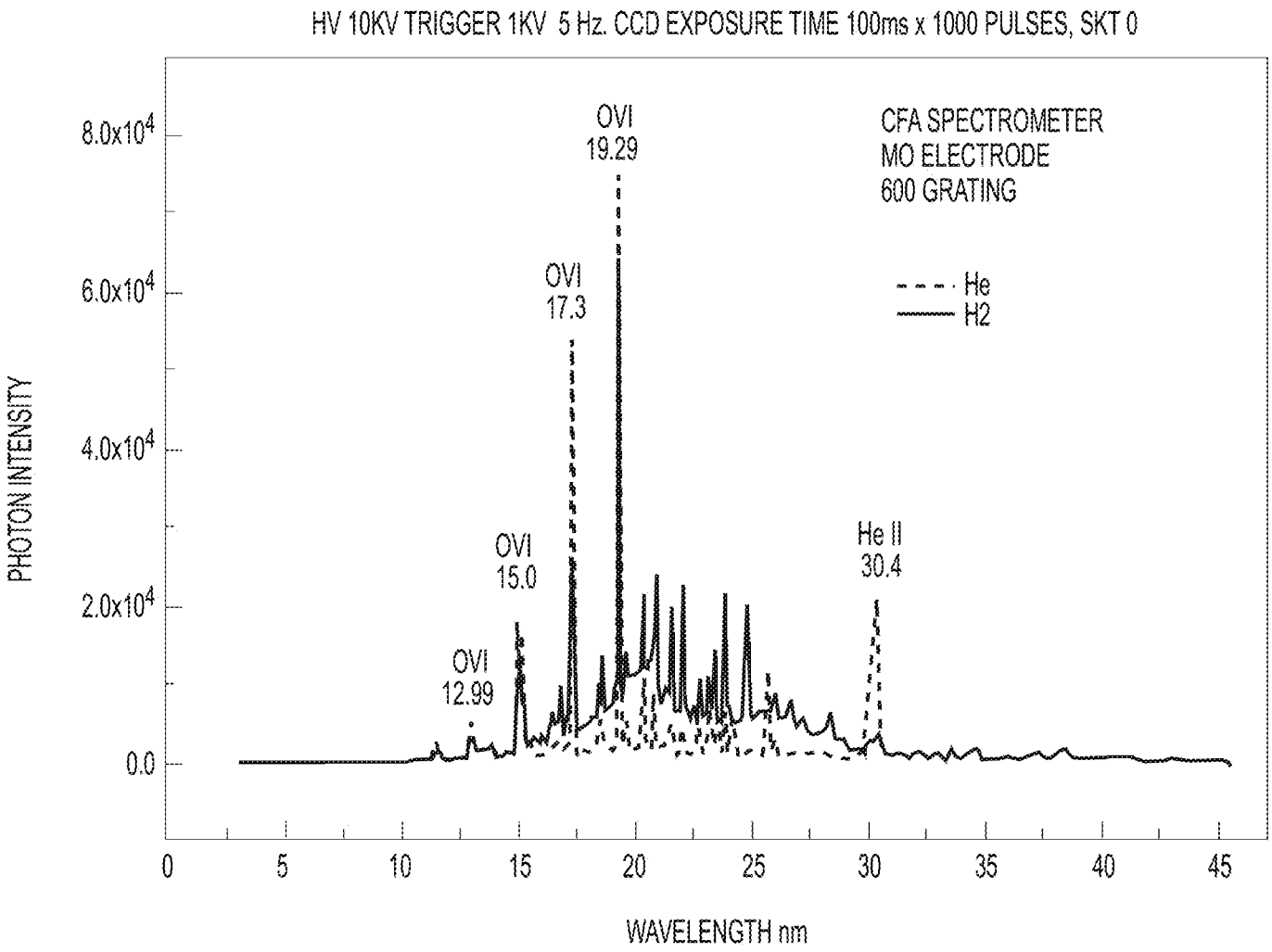
HV 10KV TRIGGER 1KV 5 Hz. CCD EXPOSURE TIME 100ms x 1000 PULSES, SKT 0
CFA SPECTROMETER
MO ELECTRODE
600 GRATING
He
H2
OVI
19.29
OVI
17.3
OVI
15.0
OVI
12.99
He II
30.4
PHOTON INTENSITY
8.0x10^4
6.0x10^4
4.0x10^4
2.0x10^4
0.0
0
5
10
15
20
25
30
35
40
45
WAVELENGTH nm

FIG. 18B

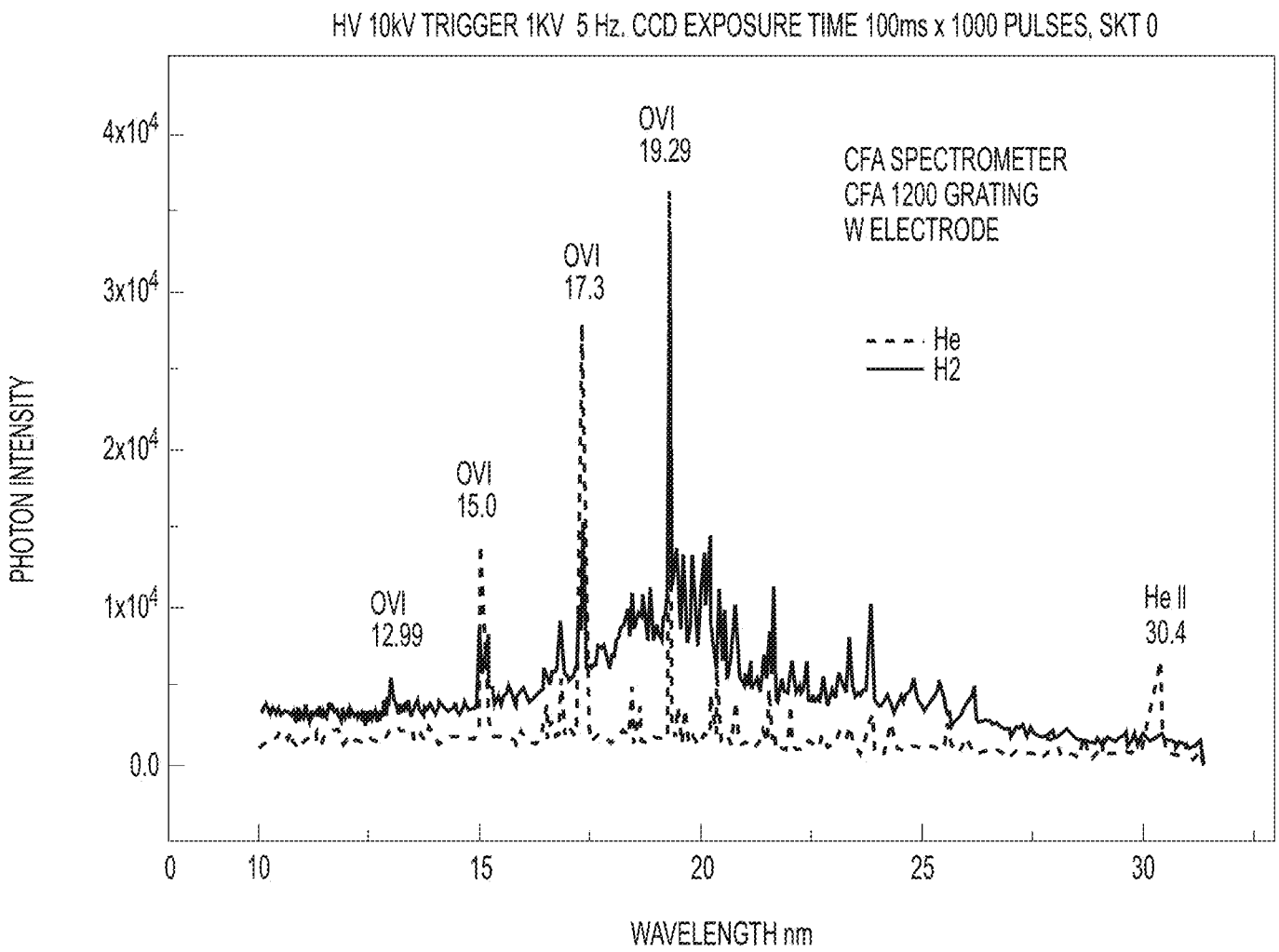
HV 10kV TRIGGER 1KV 5 Hz. CCD EXPOSURE TIME 100ms x 1000 PULSES, SKT 0
PHOTON INTENSITY
4x10^4
3x10^4
2x10^4
1x10^4
0.0
OVI 12.99
OVI 15.0
OVI 17.3
OVI 19.29
He II 30.4
CFA SPECTROMETER
CFA 1200 GRATING
W ELECTRODE
He
H2
0
10
15
20
25
30
WAVELENGTH nm

FIG. 18C

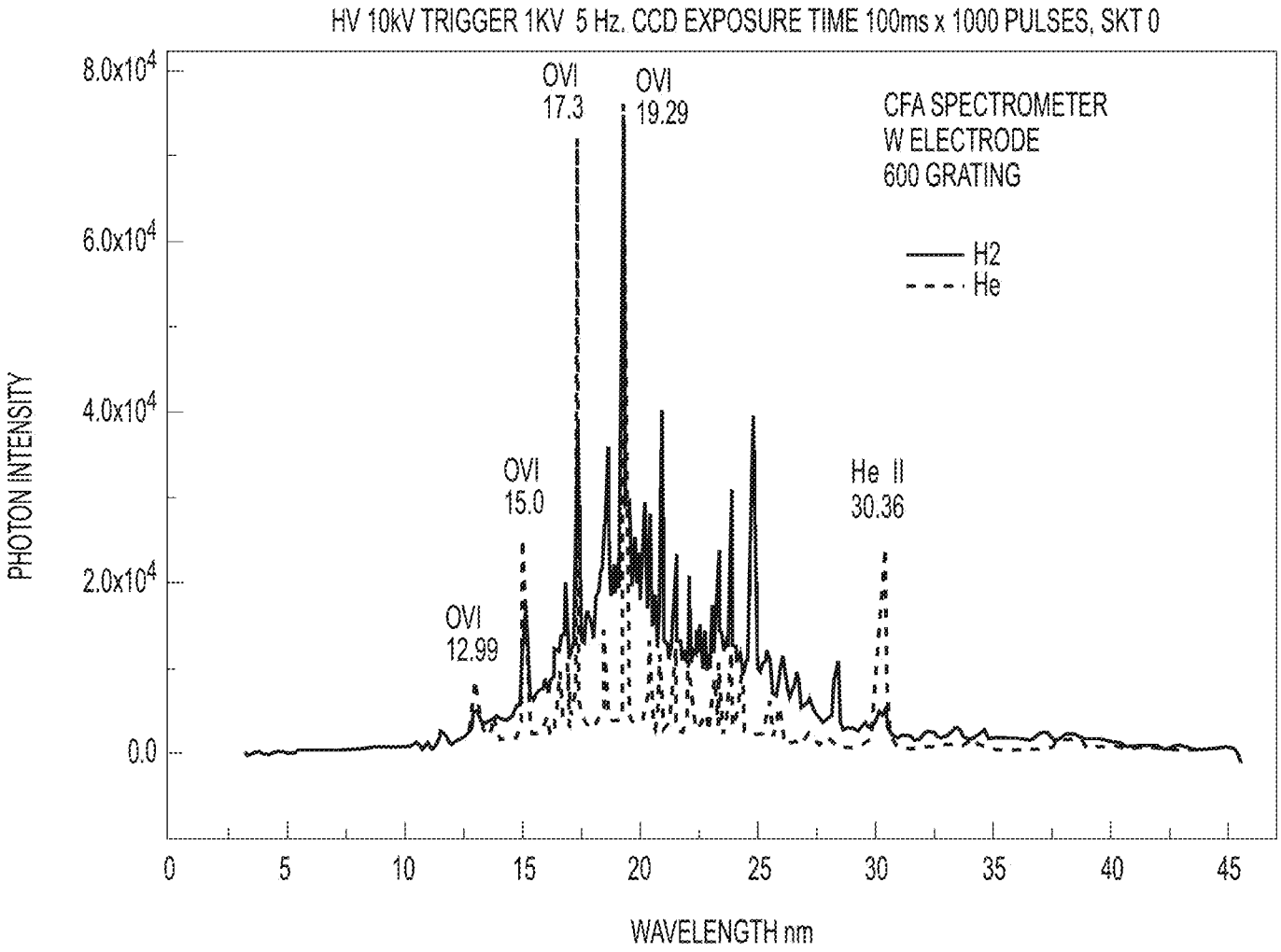
HV 10kV TRIGGER 1KV 5 Hz. CCD EXPOSURE TIME 100ms x 1000 PULSES, SKT 0
PHOTON INTENSITY
8.0x10^4
6.0x10^4
4.0x10^4
2.0x10^4
0.0
OVI 17.3
OVI 19.29
OVI 15.0
OVI 12.99
He II 30.36
CFA SPECTROMETER
W ELECTRODE
600 GRATING
H2
He
0
5
10
15
20
25
30
35
40
45
WAVELENGTH nm

FIG. 18D

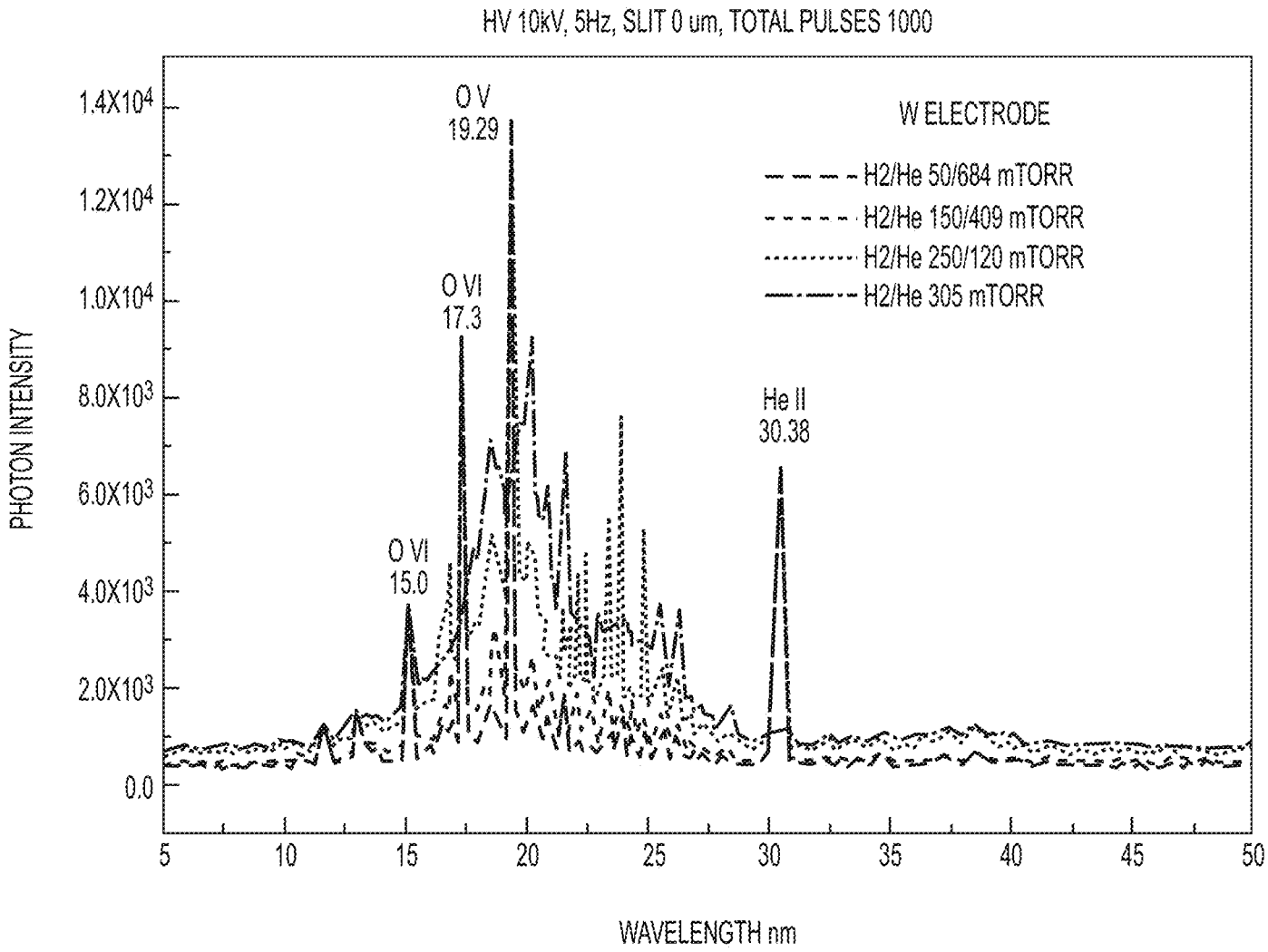
HV 10kV, 5Hz, SLIT 0 um, TOTAL PULSES 1000
W ELECTRODE
H2/He 50/684 mTORR
H2/He 150/409 mTORR
H2/He 250/120 mTORR
H2/He 305 mTORR
O V
19.29
O VI
17.3
O VI
15.0
He II
30.38
PHOTON INTENSITY
1.4X10^4
1.2X10^4
1.0X10^4
8.0X10^3
6.0X10^3
4.0X10^3
2.0X10^3
0.0
5
10
15
20
25
30
35
40
45
50
WAVELENGTH nm

FIG. 19

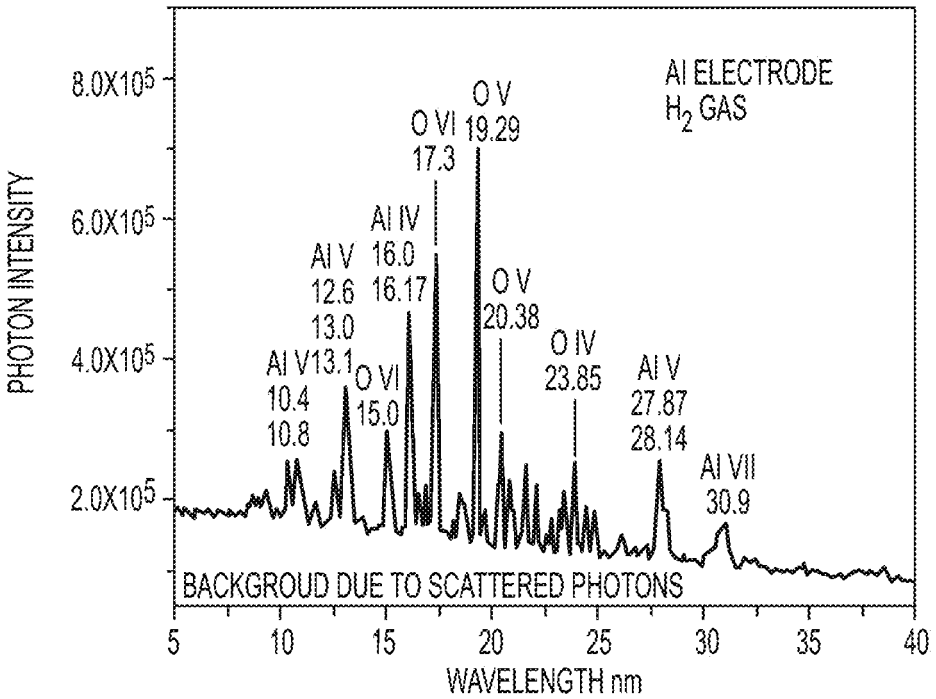

FIG. 20A

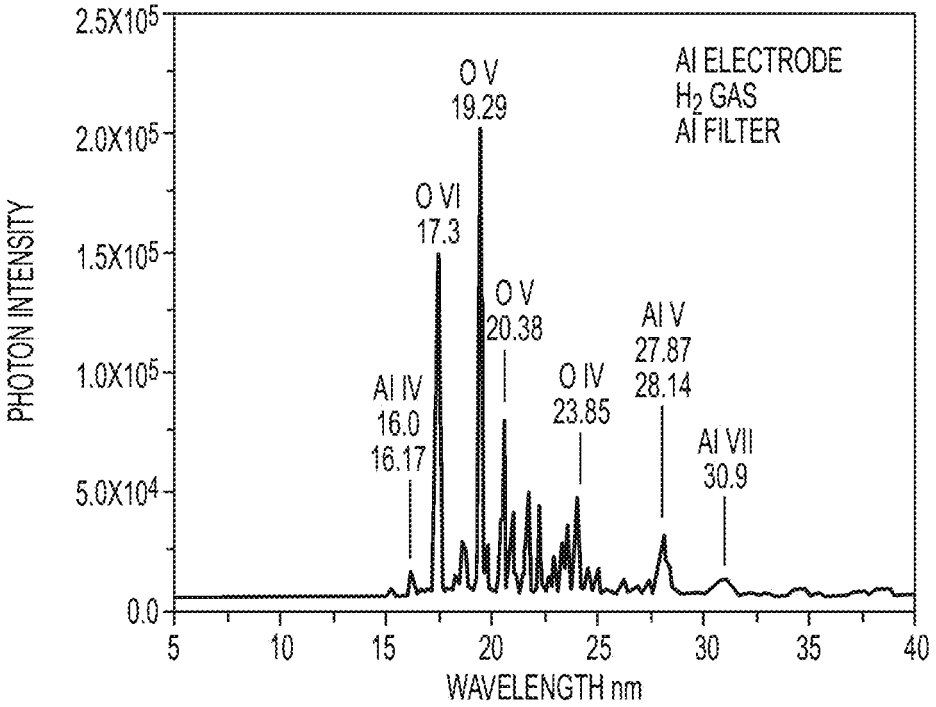

FIG. 20B

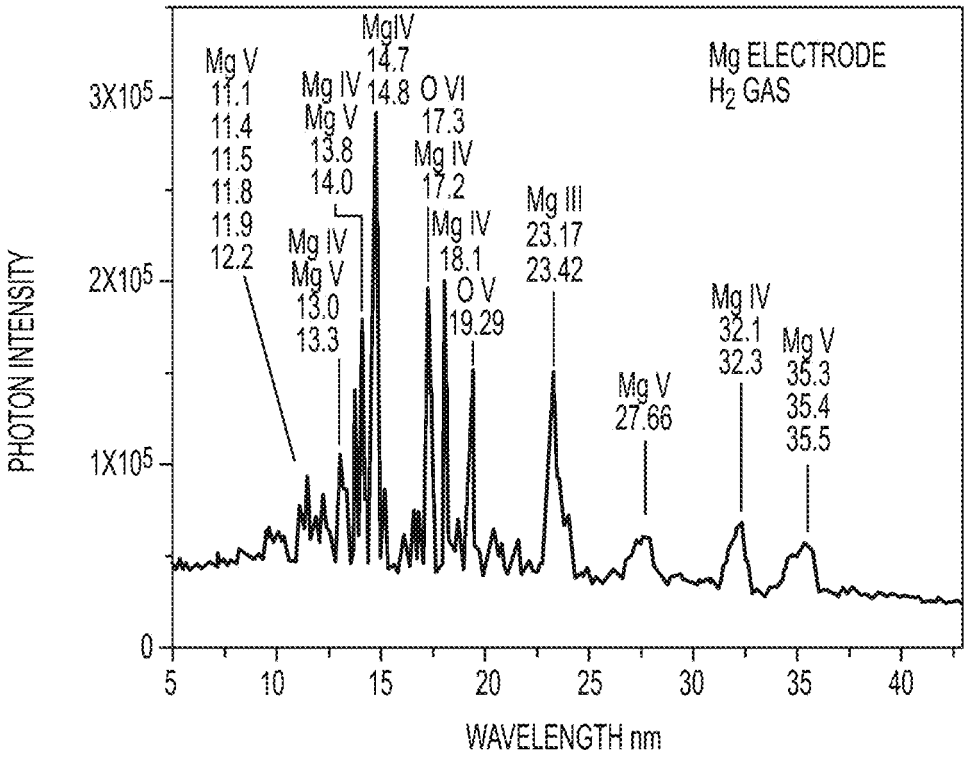

FIG. 20C

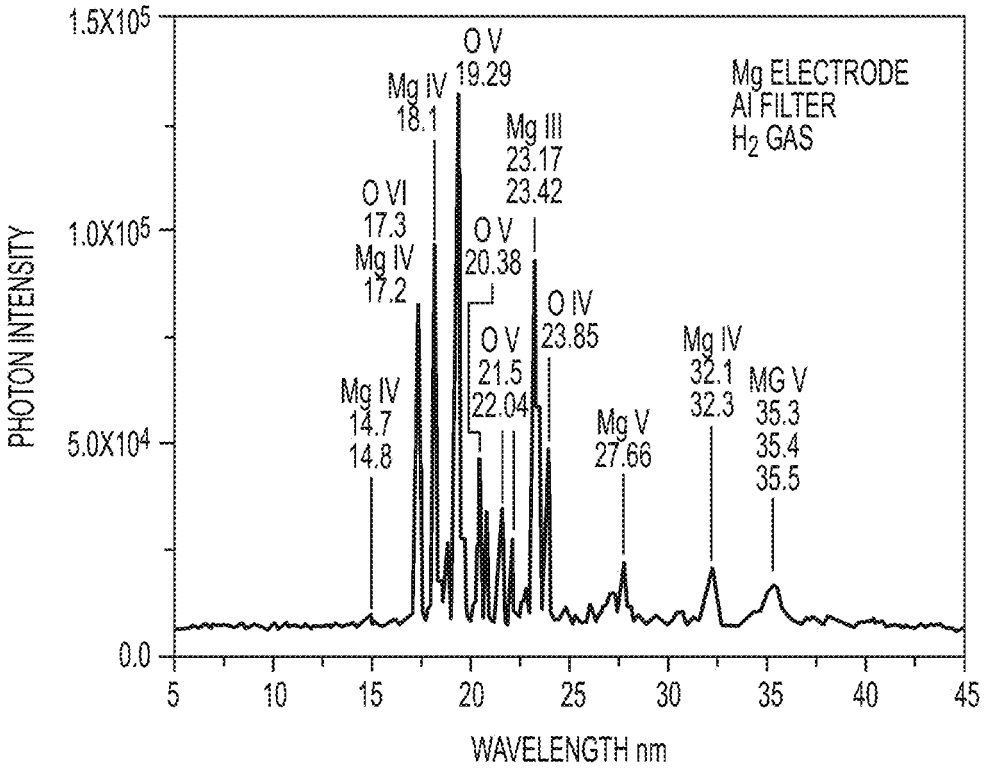

FIG. 20D

FIG. 21A

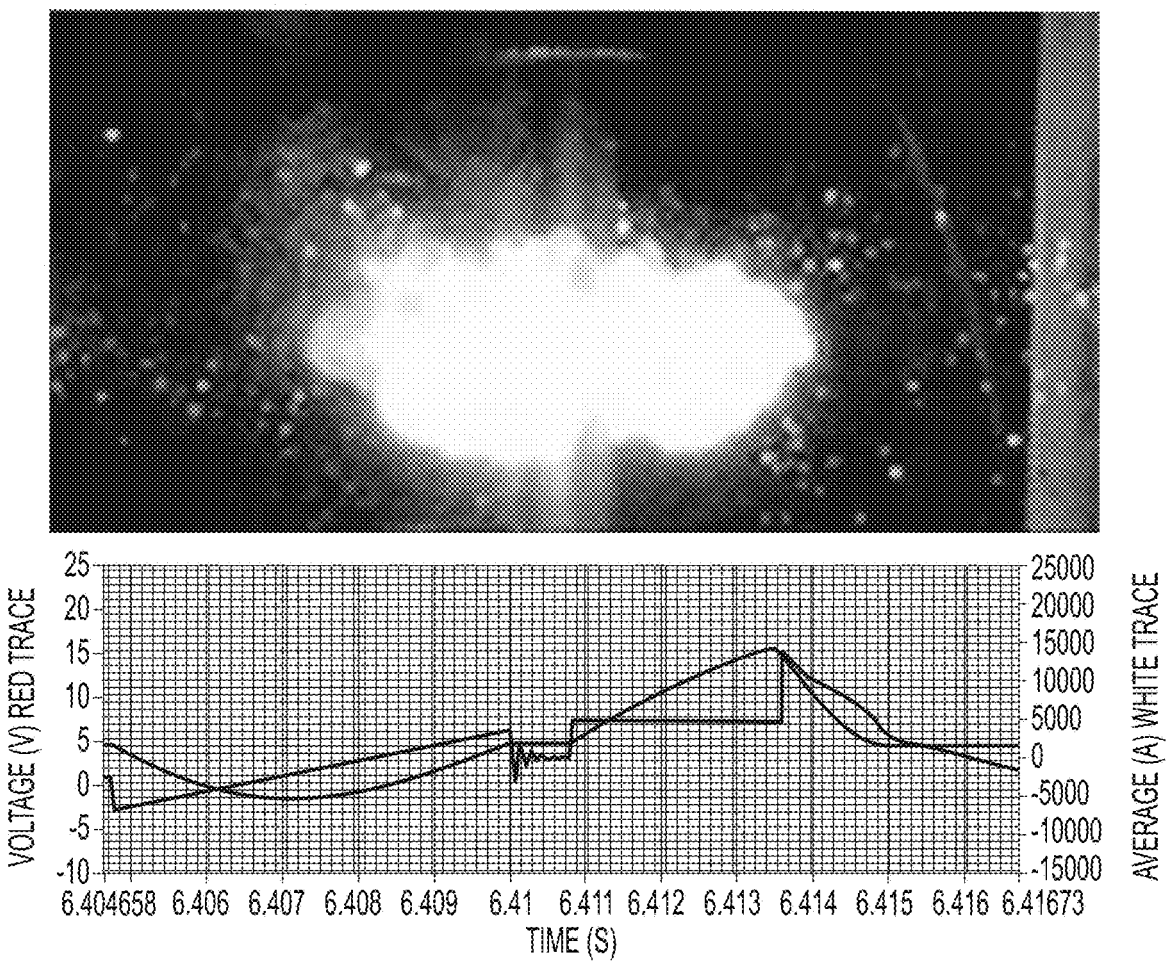

FIG. 21B

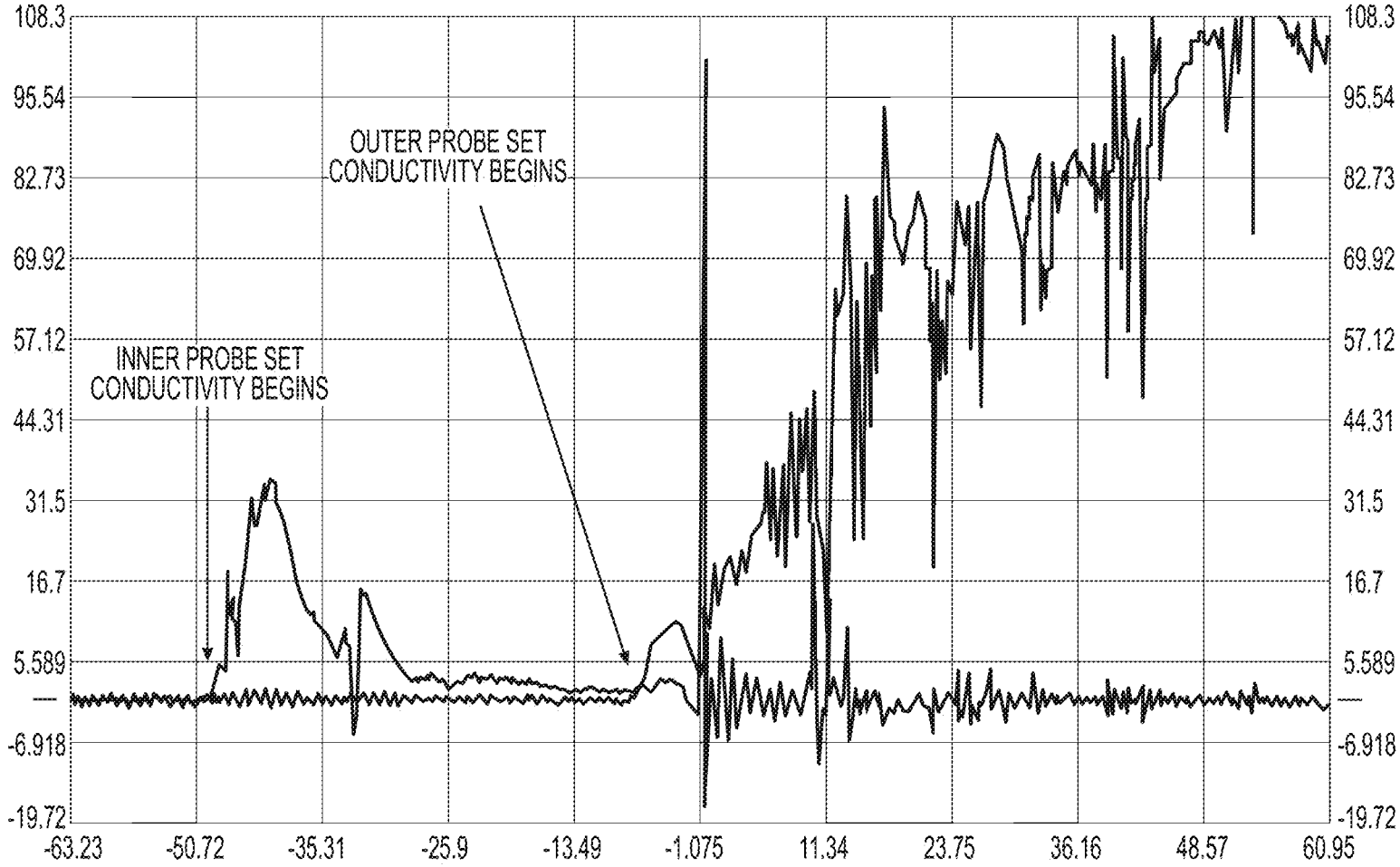
108.3
95.54
82.73
69.92
57.12
44.31
31.5
16.7
5.589
—
-6.918
-19.72
-63.23
-50.72
-35.31
-25.9
-13.49
-1.075
11.34
23.75
36.16
48.57
60.95
OUTER PROBE SET
CONDUCTIVITY BEGINS
INNER PROBE SET
CONDUCTIVITY BEGINS

FIG. 22

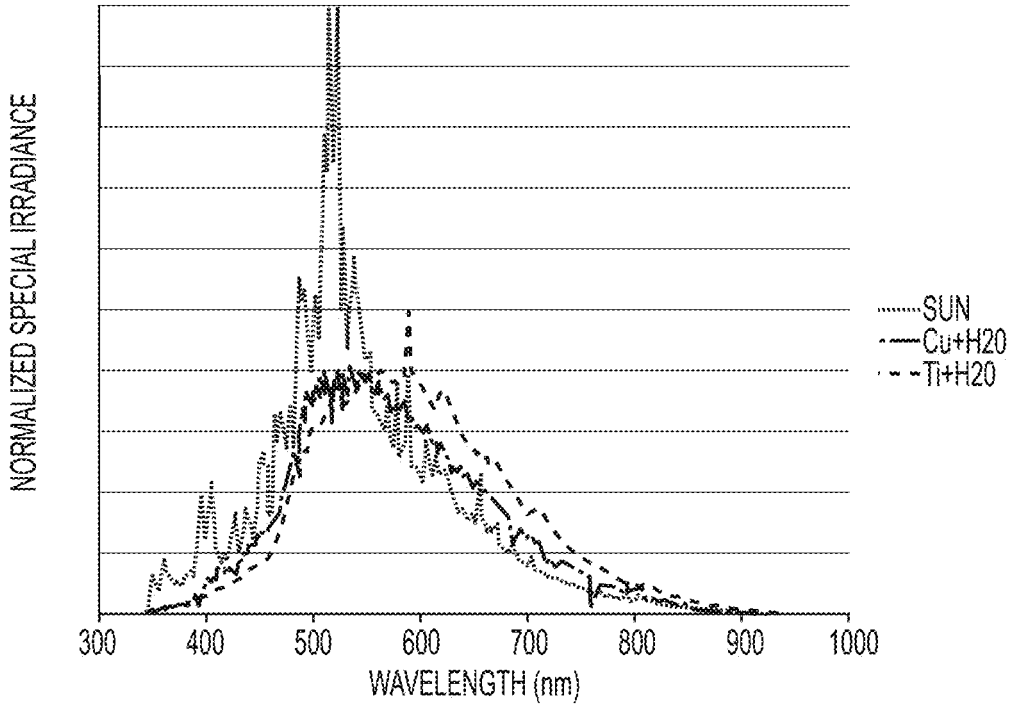
NORMALIZED SPECIAL IRRADIANCE
300
400
500
600
700
800
900
1000
WAVELENGTH (nm)
SUN
Cu+H20
Ti+H20

FIG. 23

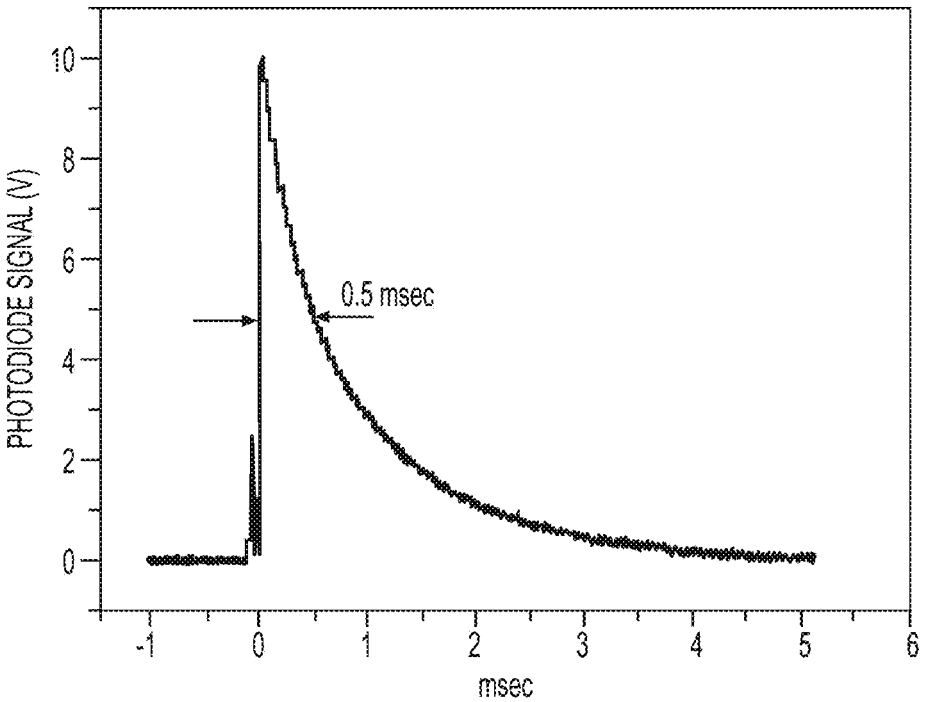
PHOTODIODE SIGNAL (V)
10
8
6
4
2
0
0.5 msec
-1
0
1
2
3
4
5
6
msec

FIG. 24

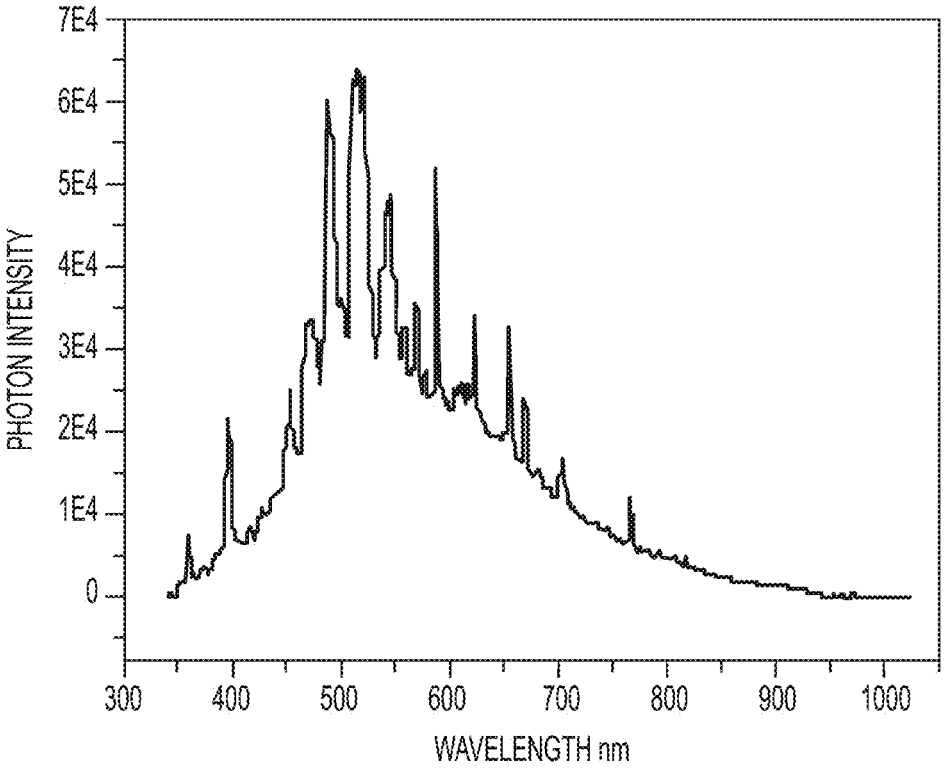
7E4
6E4
5E4
4E4
3E4
2E4
1E4
0
PHOTON INTENSITY
300
400
500
600
700
800
900
1000
WAVELENGTH nm

FIG. 25

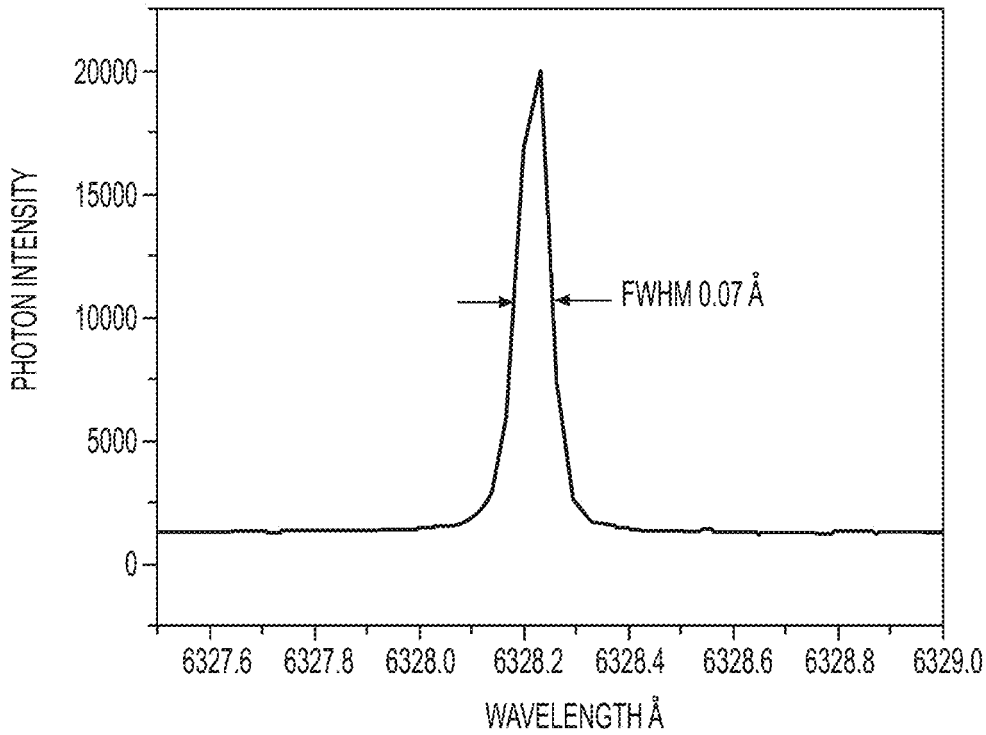

FIG. 26A

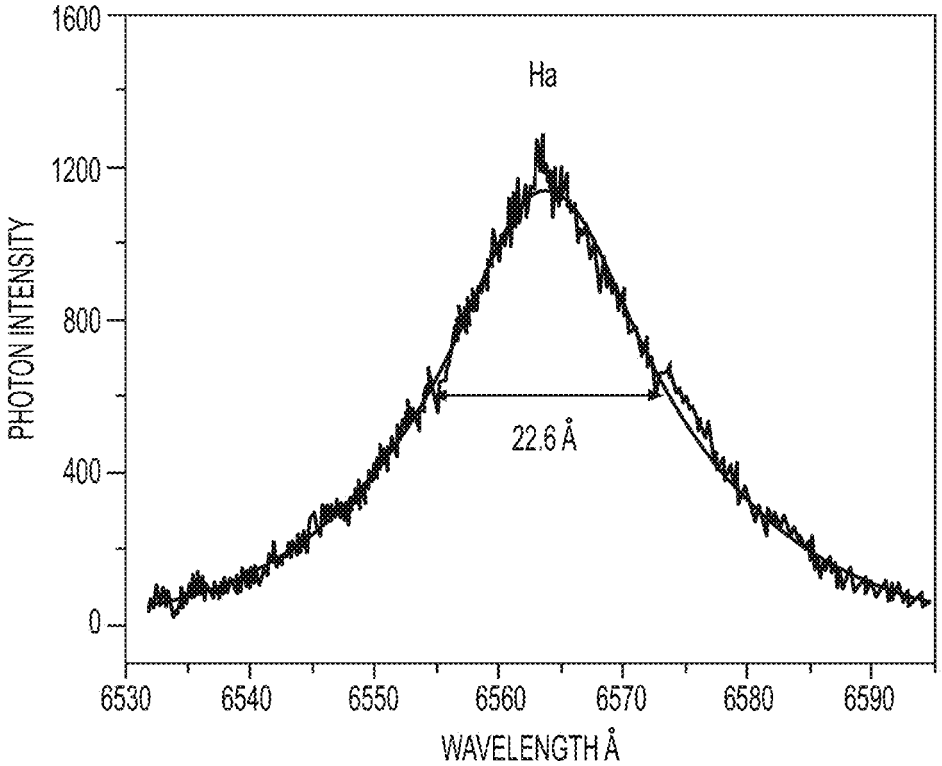

FIG. 26B

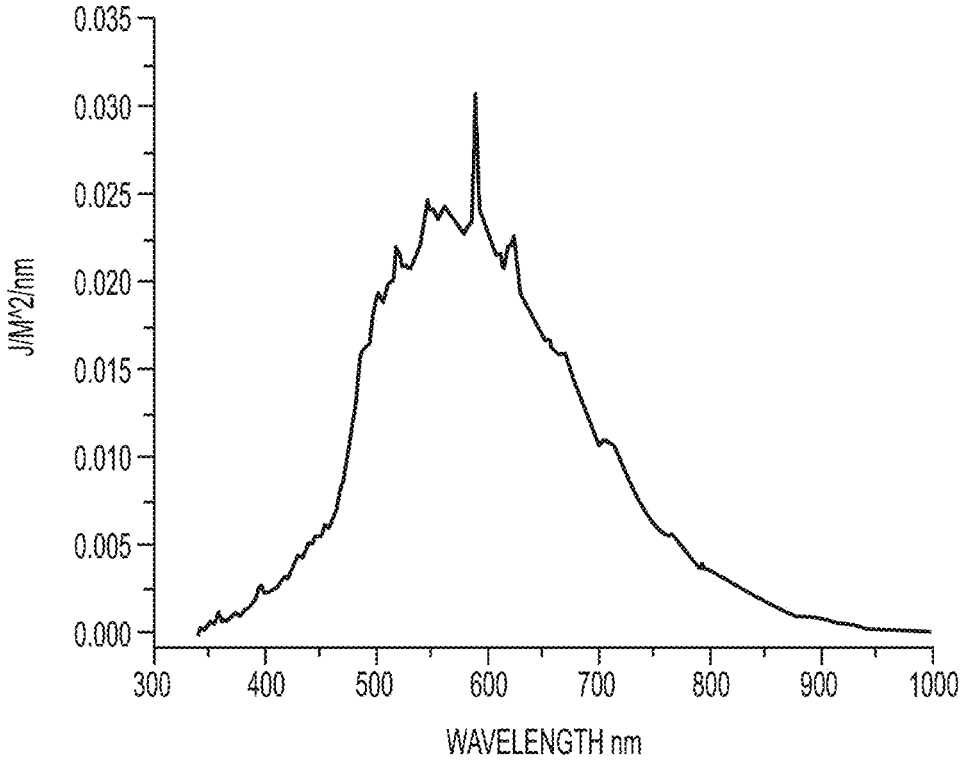
0.035
0.030
0.025
0.020
0.015
0.010
0.005
0.000
J/M^2/nm
300
400
500
600
700
800
900
1000
WAVELENGTH nm

FIG. 27

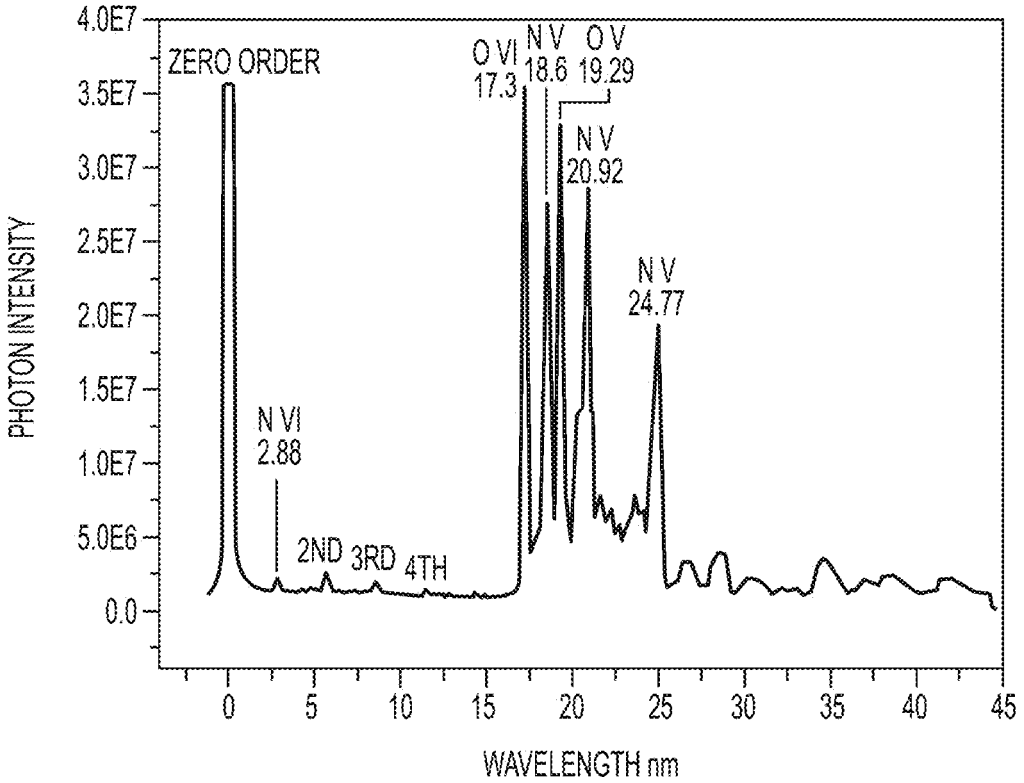
ZERO ORDER
O VI 17.3
N V 18.6
O V 19.29
N V 20.92
N V 24.77
N VI 2.88
2ND
3RD
4TH
PHOTON INTENSITY
4.0E7
3.5E7
3.0E7
2.5E7
2.0E7
1.5E7
1.0E7
5.0E6
0.0
0
5
10
15
20
25
30
35
40
45
WAVELENGTH nm

FIG. 28

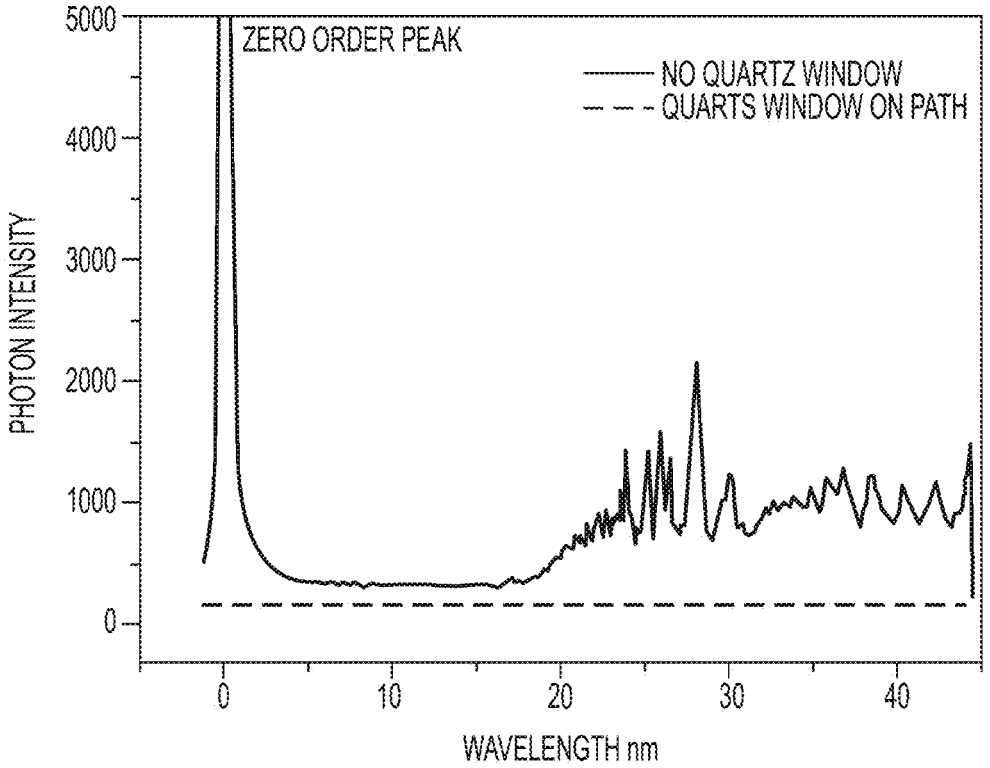
ZERO ORDER PEAK
NO QUARTZ WINDOW
QUARTS WINDOW ON PATH
PHOTON INTENSITY
5000
4000
3000
2000
1000
0
0
10
20
30
40
WAVELENGTH nm

FIG. 29

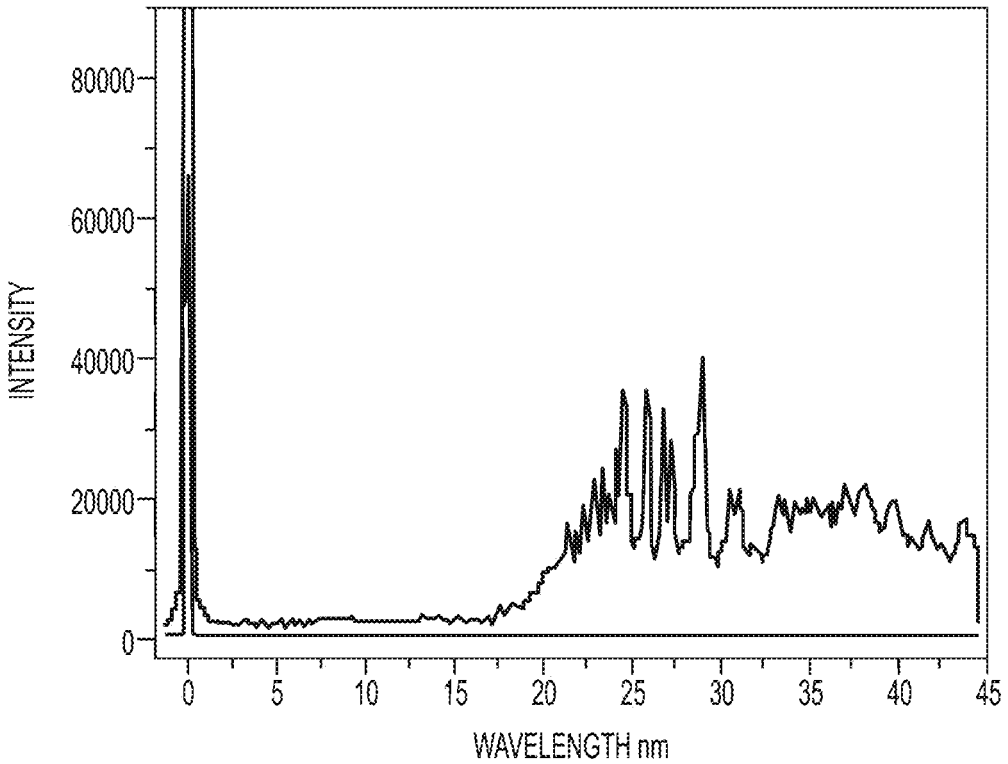
80000
60000
40000
20000
0
INTENSITY
0
5
10
15
20
25
30
35
40
45
WAVELENGTH nm

FIG. 30

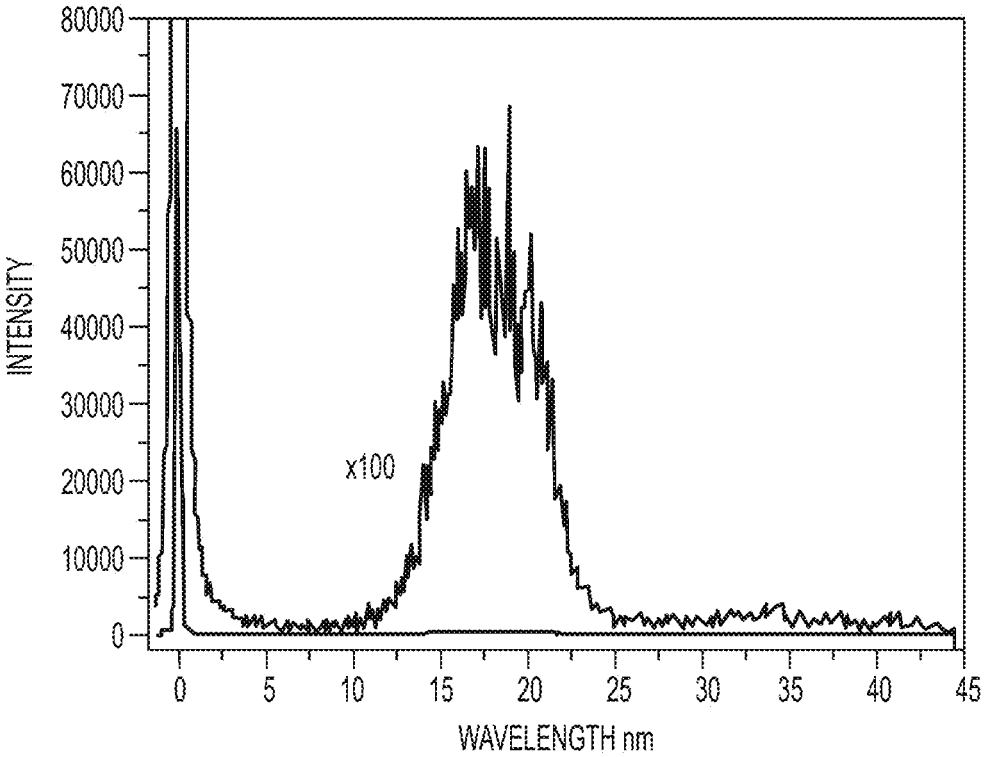
80000
70000
60000
50000
40000
30000
20000
10000
0
INTENSITY
x100
0
5
10
15
20
25
30
35
40
45
WAVELENGTH nm

FIG. 31

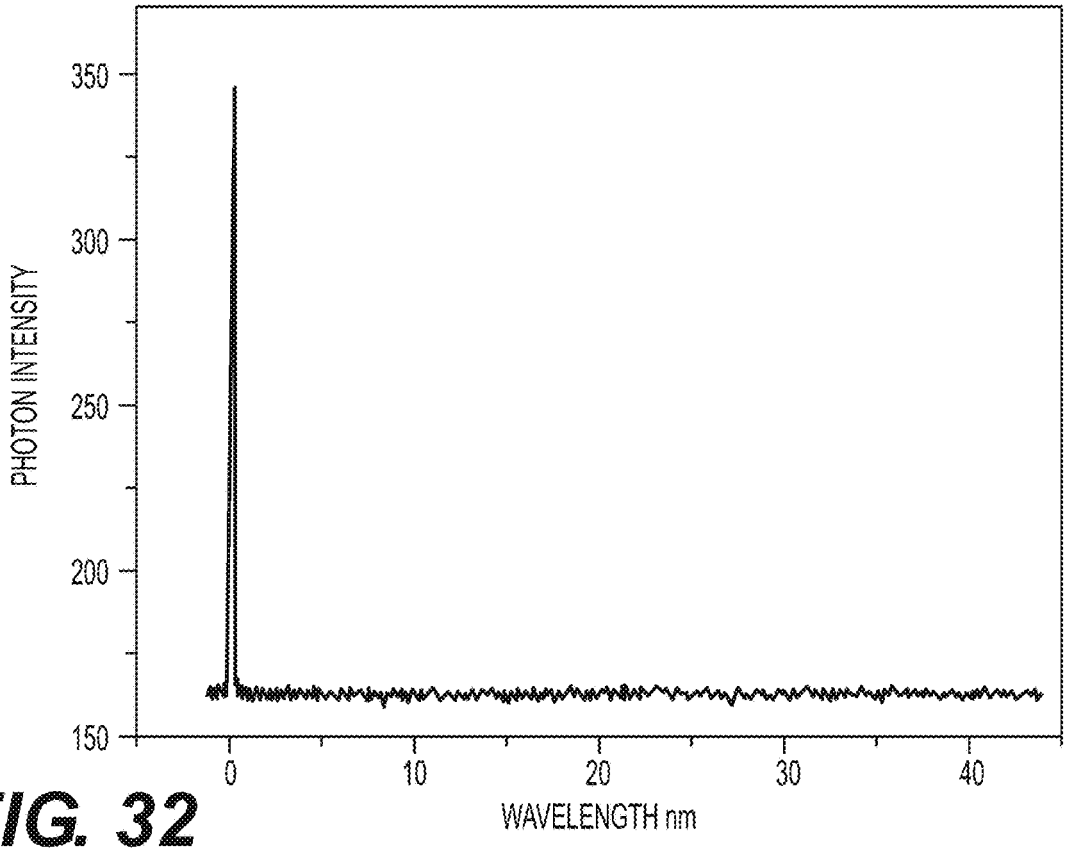
PHOTON INTENSITY
350
300
250
200
150
0
10
20
30
40
WAVELENGTH nm

FIG. 32

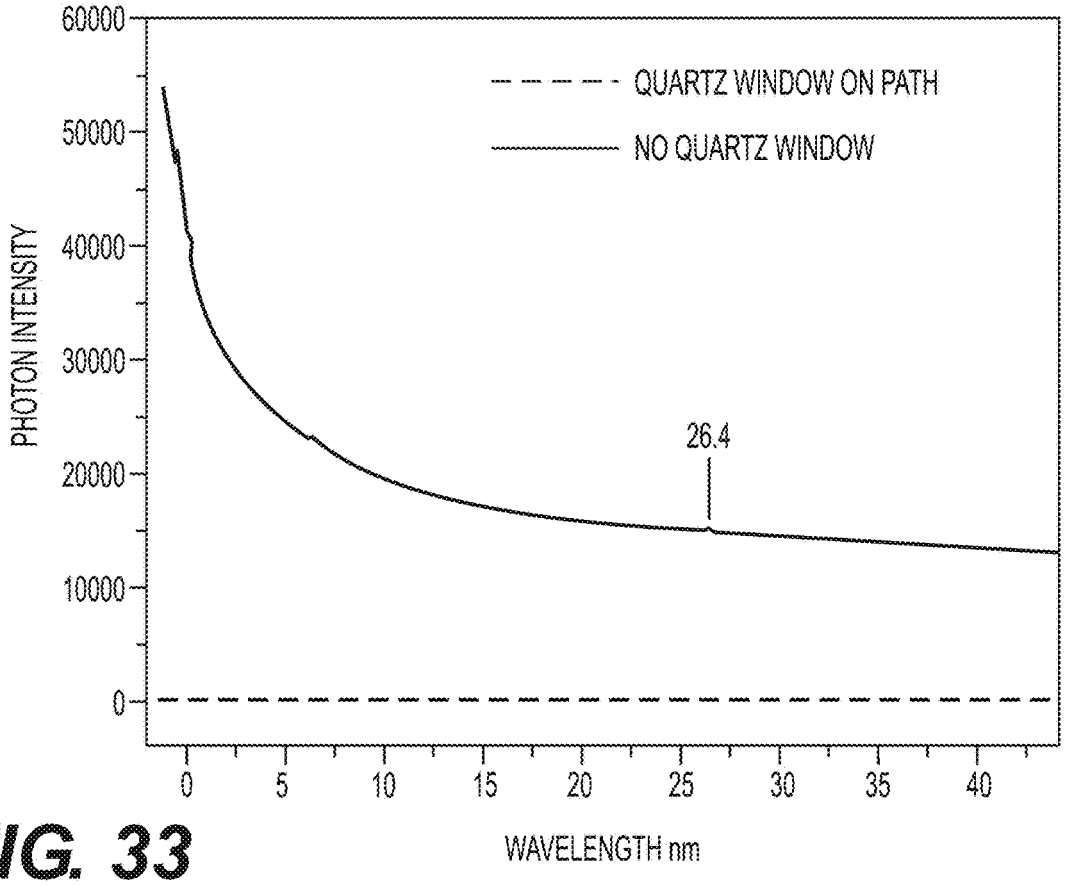
QUARTZ WINDOW ON PATH
NO QUARTZ WINDOW
PHOTON INTENSITY
60000
50000
40000
30000
20000
10000
0
26.4
0
5
10
15
20
25
30
35
40
WAVELENGTH nm

FIG. 33

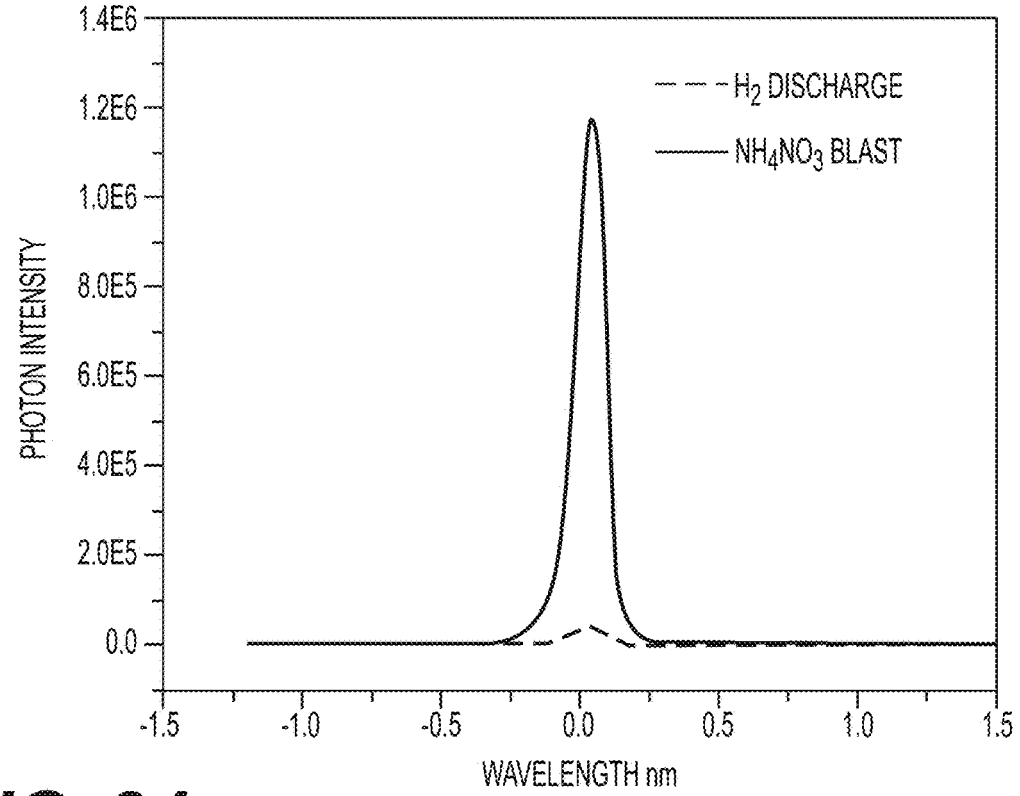
1.4E6
1.2E6
1.0E6
8.0E5
6.0E5
4.0E5
2.0E5
0.0
PHOTON INTENSITY
H2 DISCHARGE
NH4NO3 BLAST
-1.5
-1.0
-0.5
0.0
0.5
1.0
1.5
WAVELENGTH nm

FIG. 34

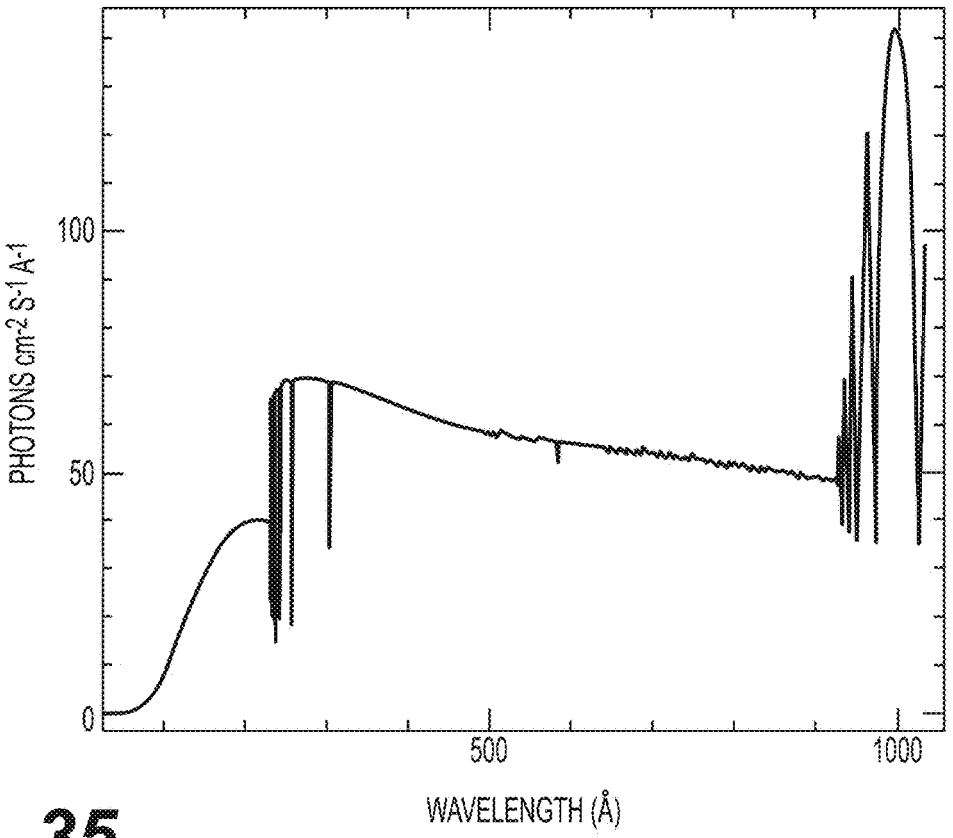
100
50
0
PHOTONS cm-2 S-1 A-1
500
1000
WAVELENGTH (Å)

FIG. 35

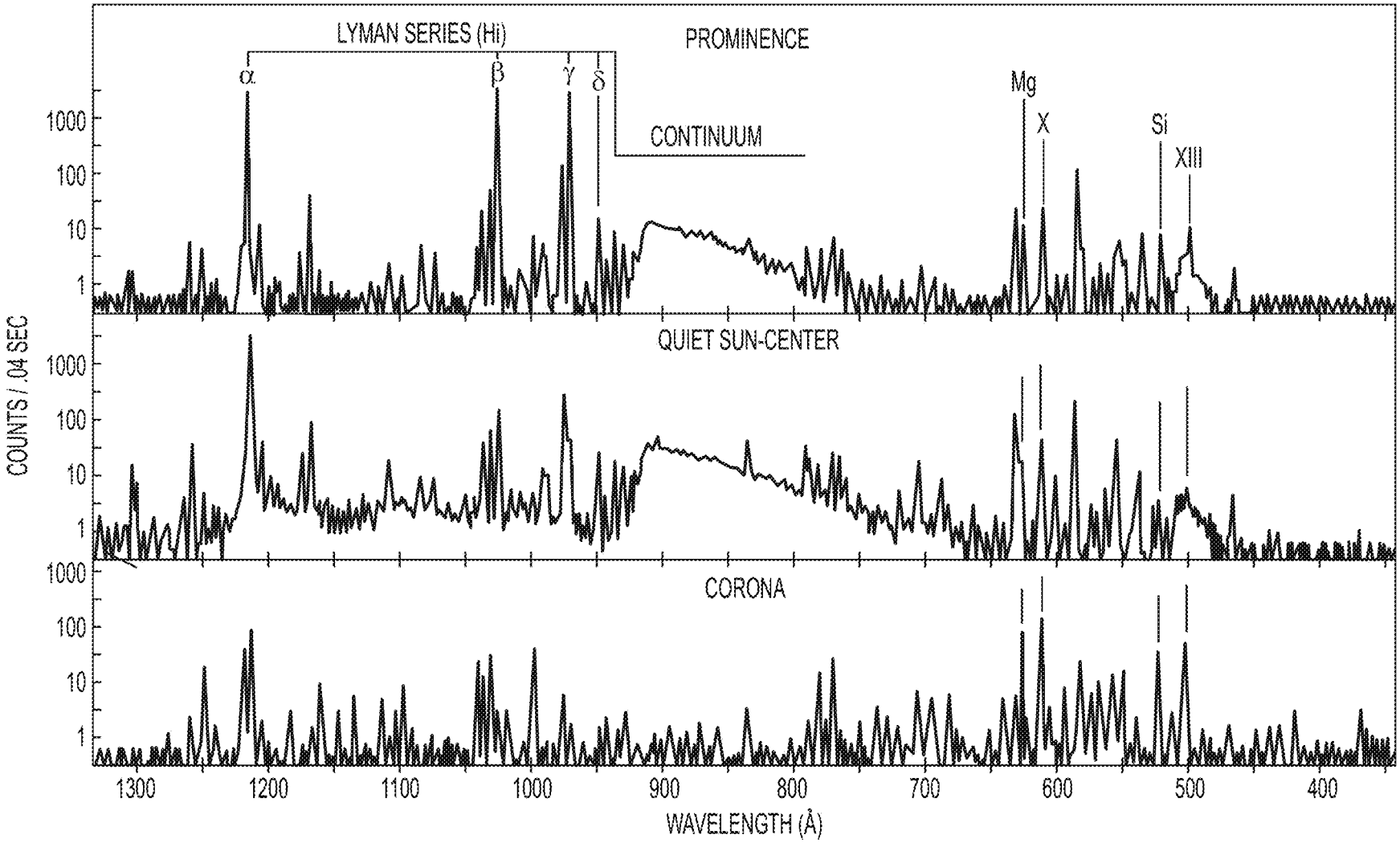
LYMAN SERIES (Hi)
α
β
γ
δ
PROMINENCE
CONTINUUM
Mg
X
Si
XIII
QUIET SUN-CENTER
CORONA
COUNTS / .04 SEC
1000
100
10
1
1300
1200
1100
1000
900
800
700
600
500
400
WAVELENGTH (Å)

FIG. 36

FIG. 37