Parkhomov-Type Apparatus and Replication Attempt

Jeff Morriss
jeff.c.morriss@gmail.com

Overview of Apparatus

- External H_2 source (Hydrogen generator)
  - For controllability and safety
- SS lined alumina capsule is open at both ends and is placed in a quartz tube pressurized with H_2
  - Fused quartz wool used to hold active material in place
  - Temperature of alumina tube monitored by IR thermometer
  - H_2 pressure/vacuum easily controlled
- Quartz tube and capsule sit inside an insulated chamber serving as calorimeter
  - Monitor V_F difference between a heated and an unheated diode in the airstream.
  - Servo circuit controls voltage to fan to maintain constant thermal mass flow past the two sense diodes
  - Configuration yields excellent linearity

Cell Schematic

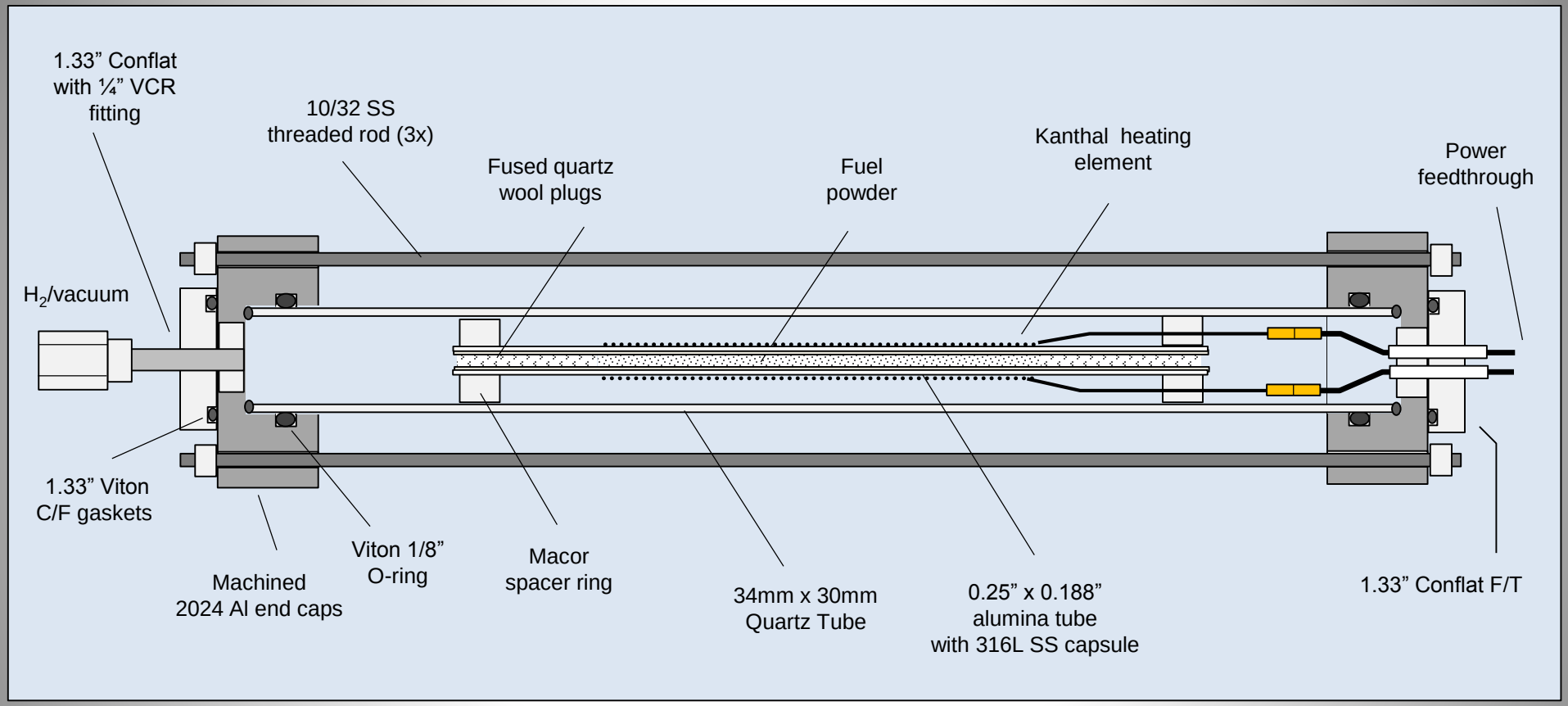

Alumina tube and Heating Element Support

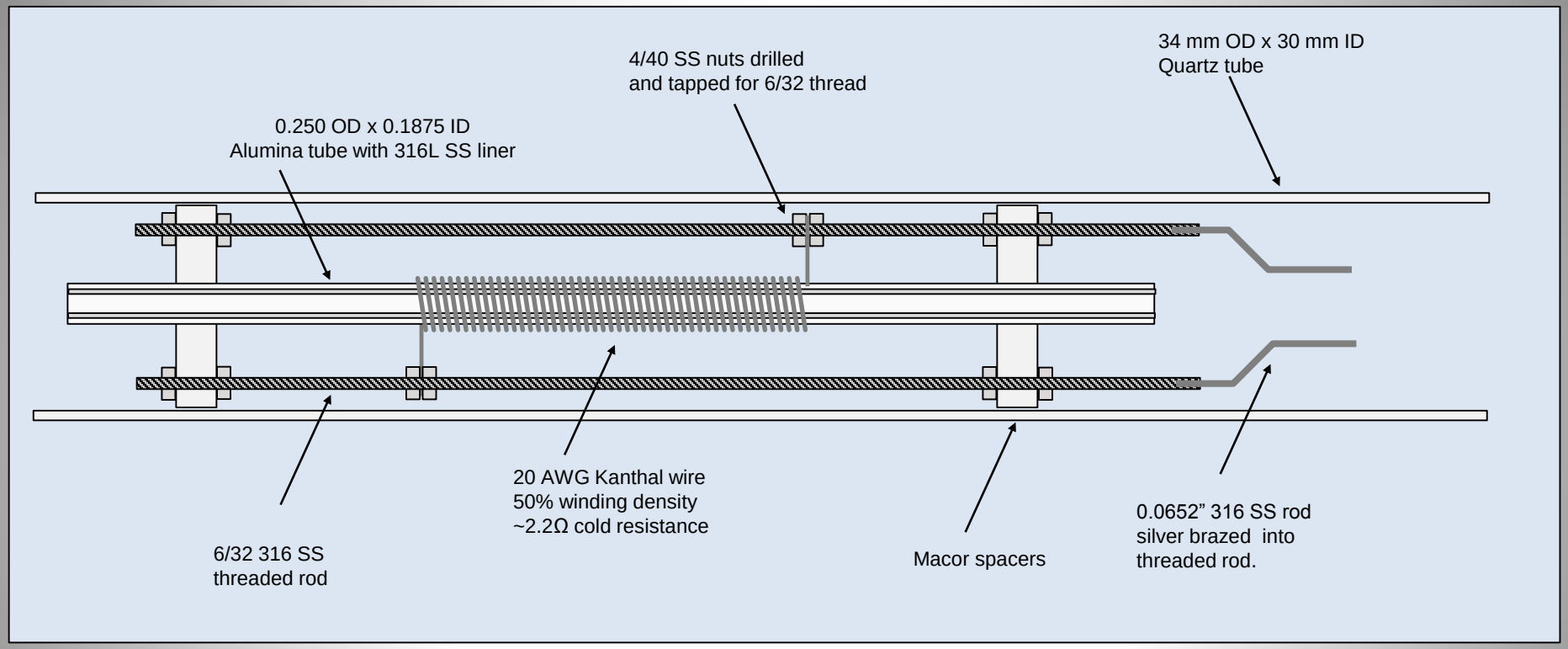

- Kanthal wire is looped over the SS threaded rod and secured between the two nuts.
- Nuts touching the Macor spacers should not be more than finger tight. Nuts securing the Kanthal wire should be wrench tight.

Overview of Apparatus

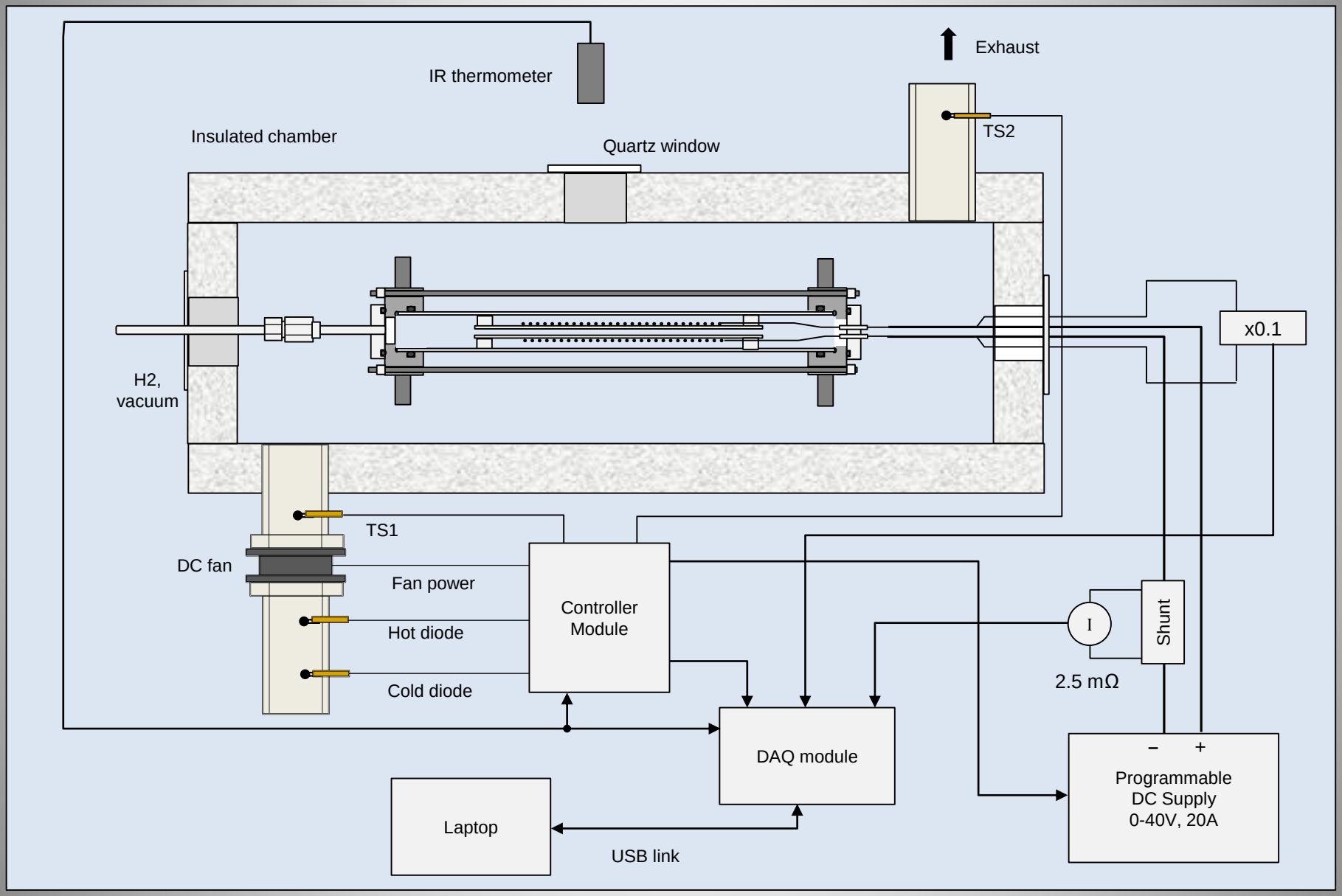

H_2/Vacuum Plumbing

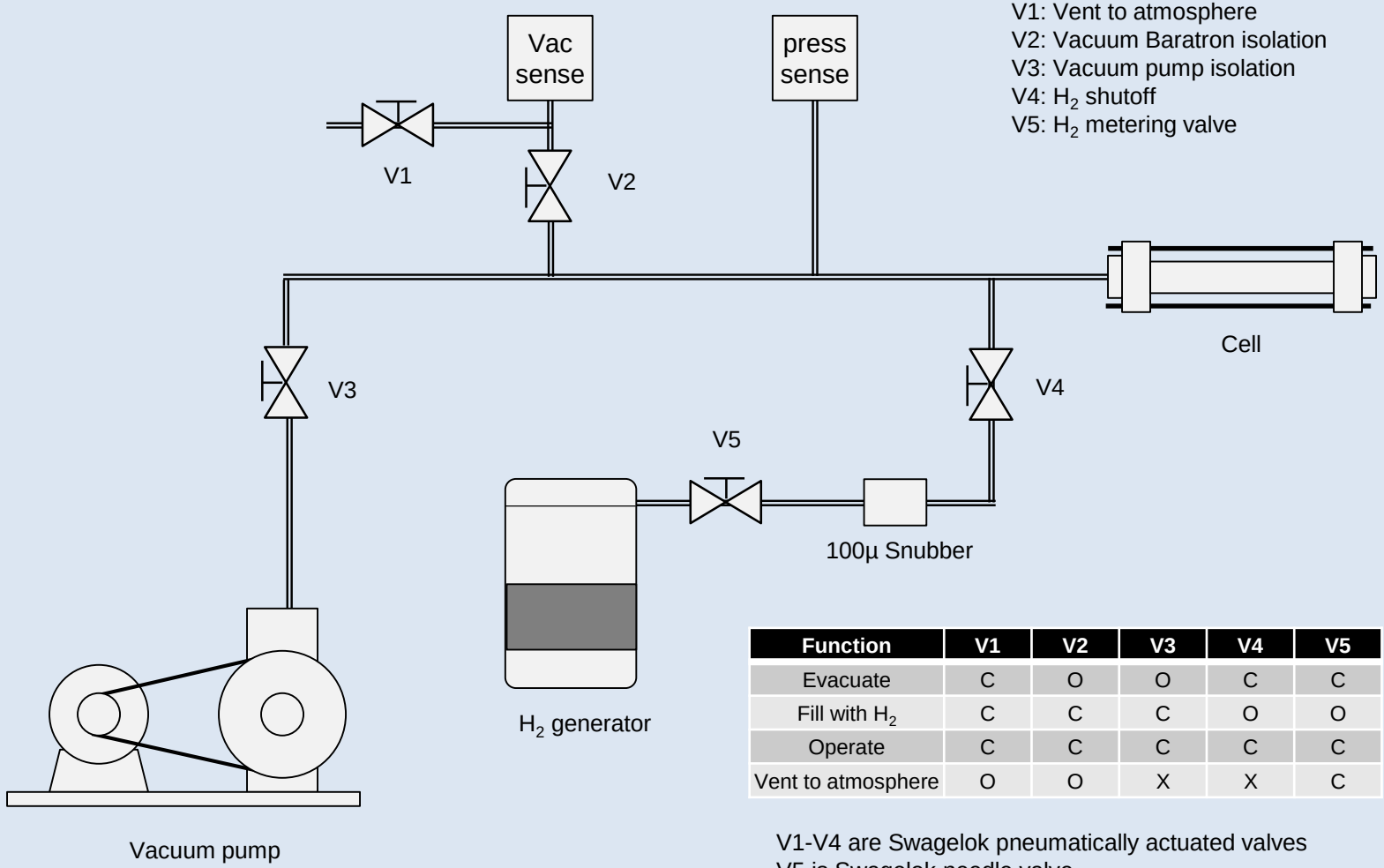

V1: Vent to atmosphere
V2: Vacuum Baratron isolation
V3: Vacuum pump isolation
V4: H_2 shutoff
V5: H_2 metering valve

Function	V1	V2	V3	V4	V5
Evacuate	C	O	O	C	C
Fill with H_2	C	C	C	O	O
Operate	C	C	C	C	C
Vent to atmosphere	O	O	X	X	C

V1-V4 are Swagelok pneumatically actuated valves
V5 is Swagelok needle valve
All tubing is 316SS
All tubing connections past V5 are ¼” VCR

Cell Details

In insulated calorimeter chamber

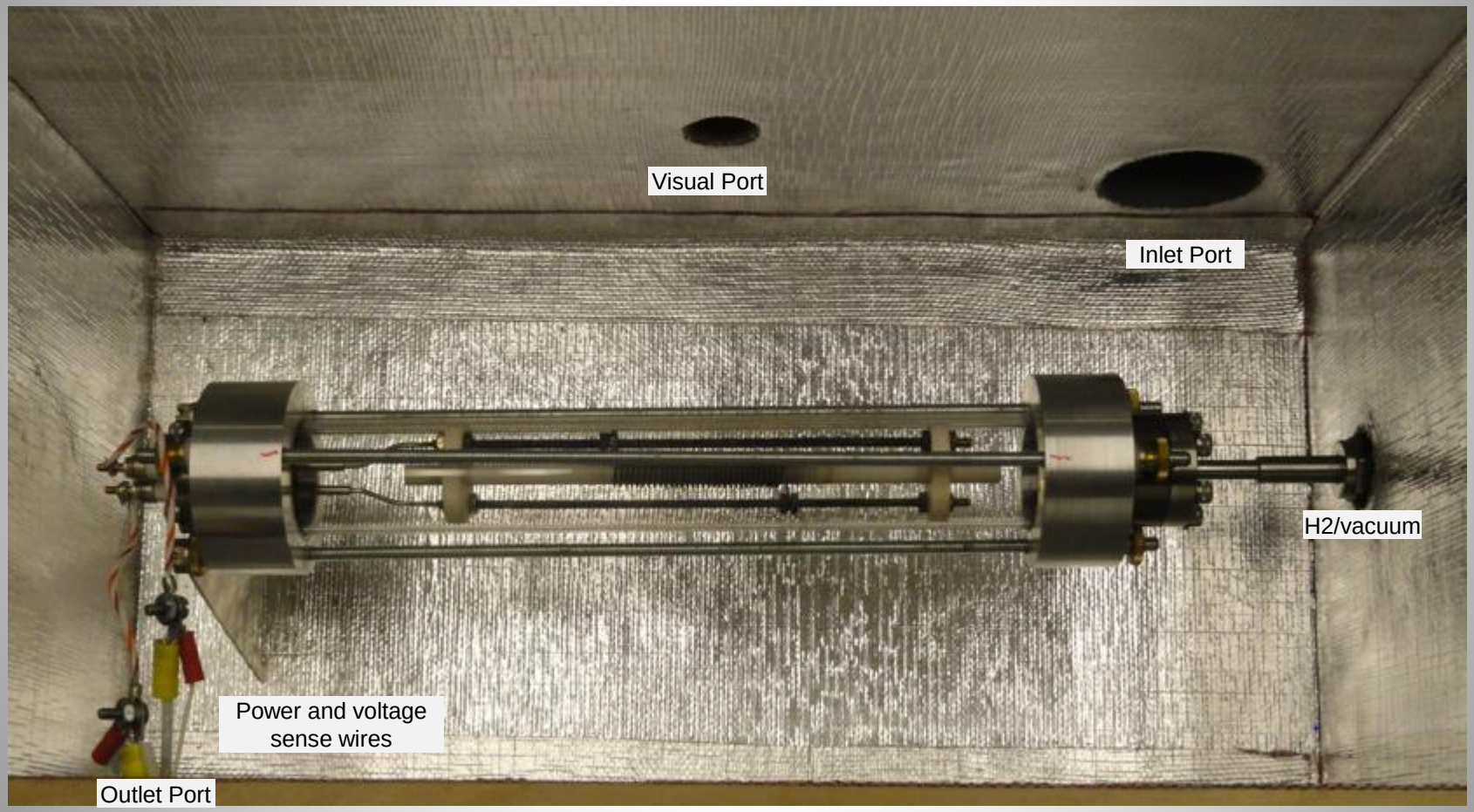

Apparatus Details

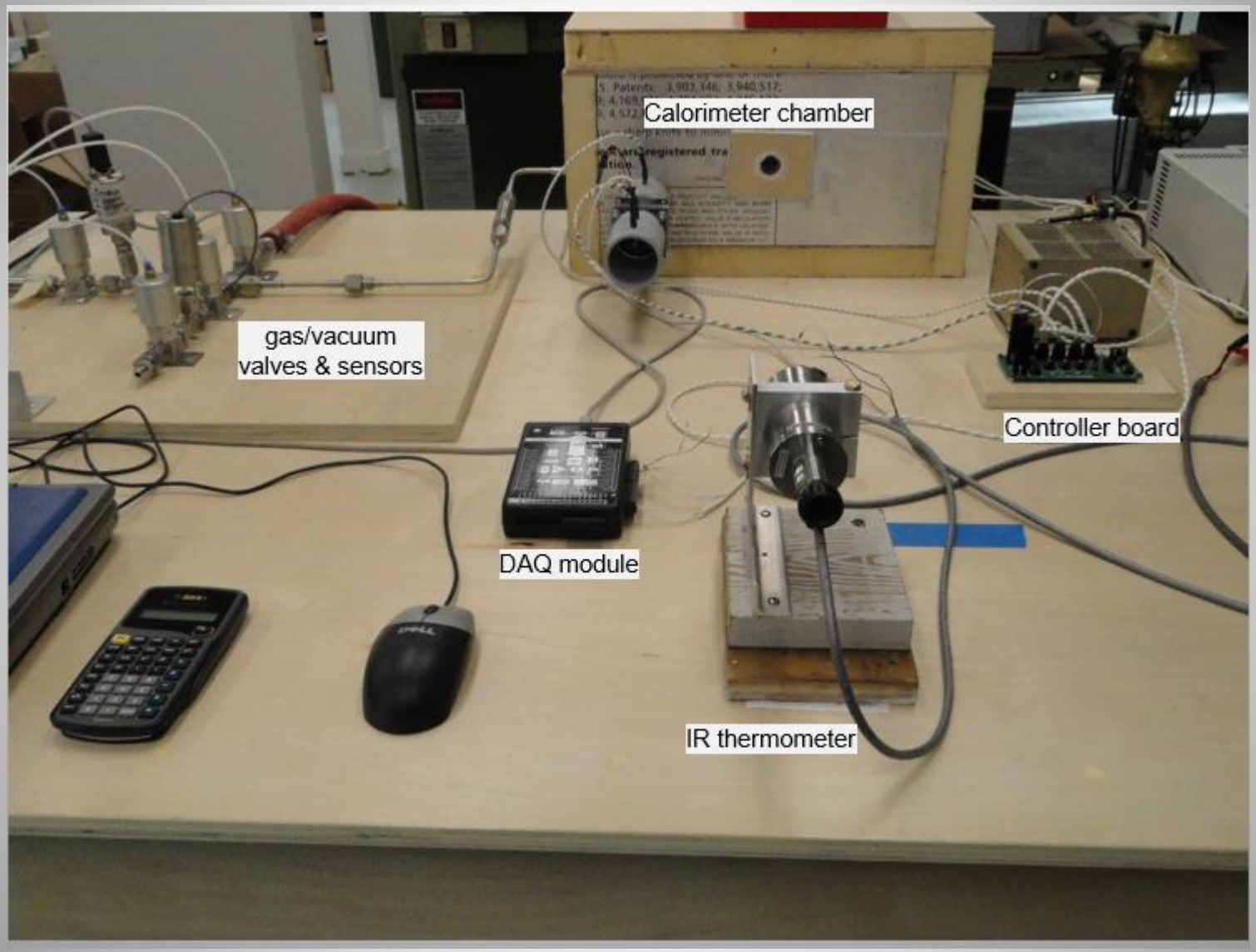

Inlet Port Details

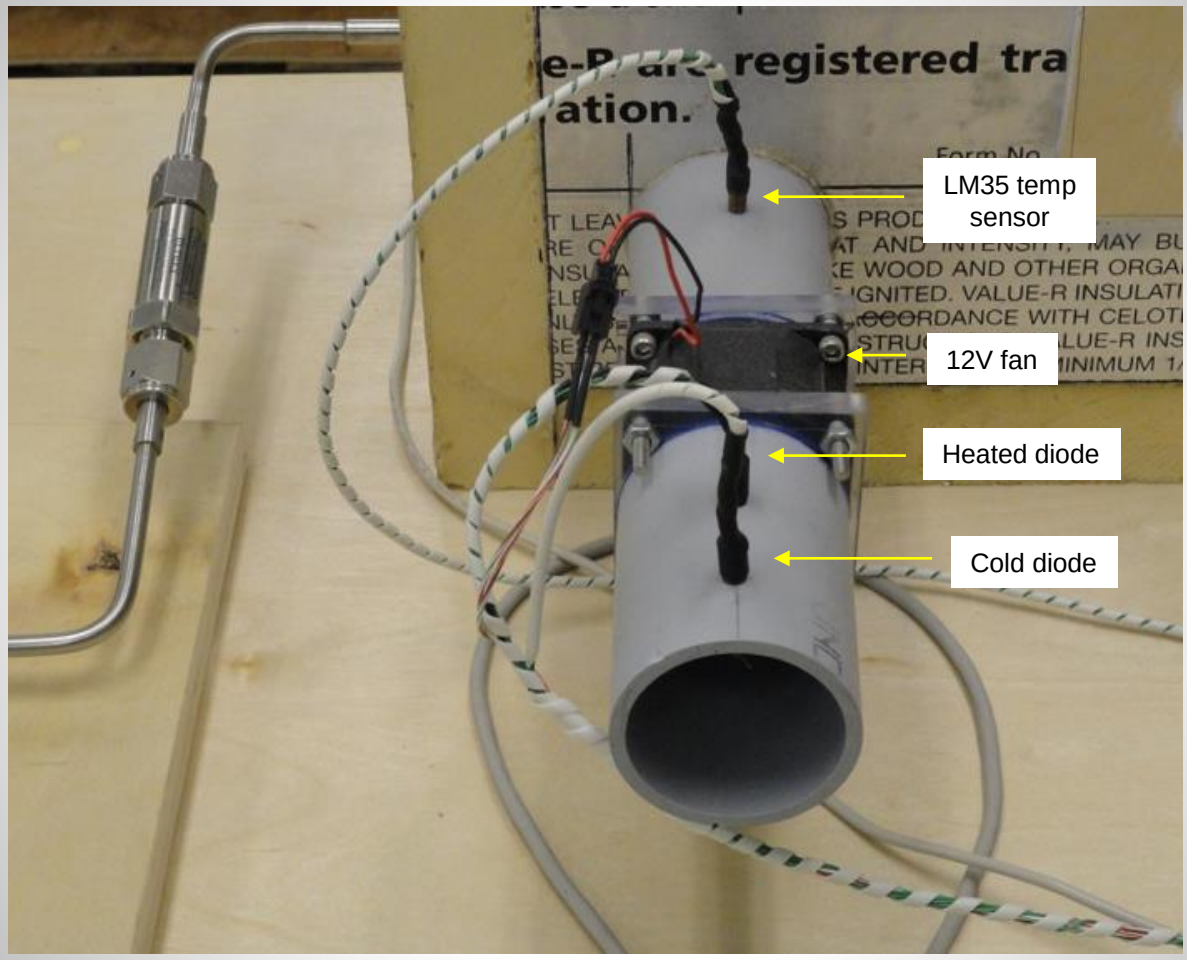

IR Thermometer Calibration against Type K Thermocouple

- Calibration performed for bare Kanthal wire on alumina tube
- Type K TC inserted into center of alumina tube

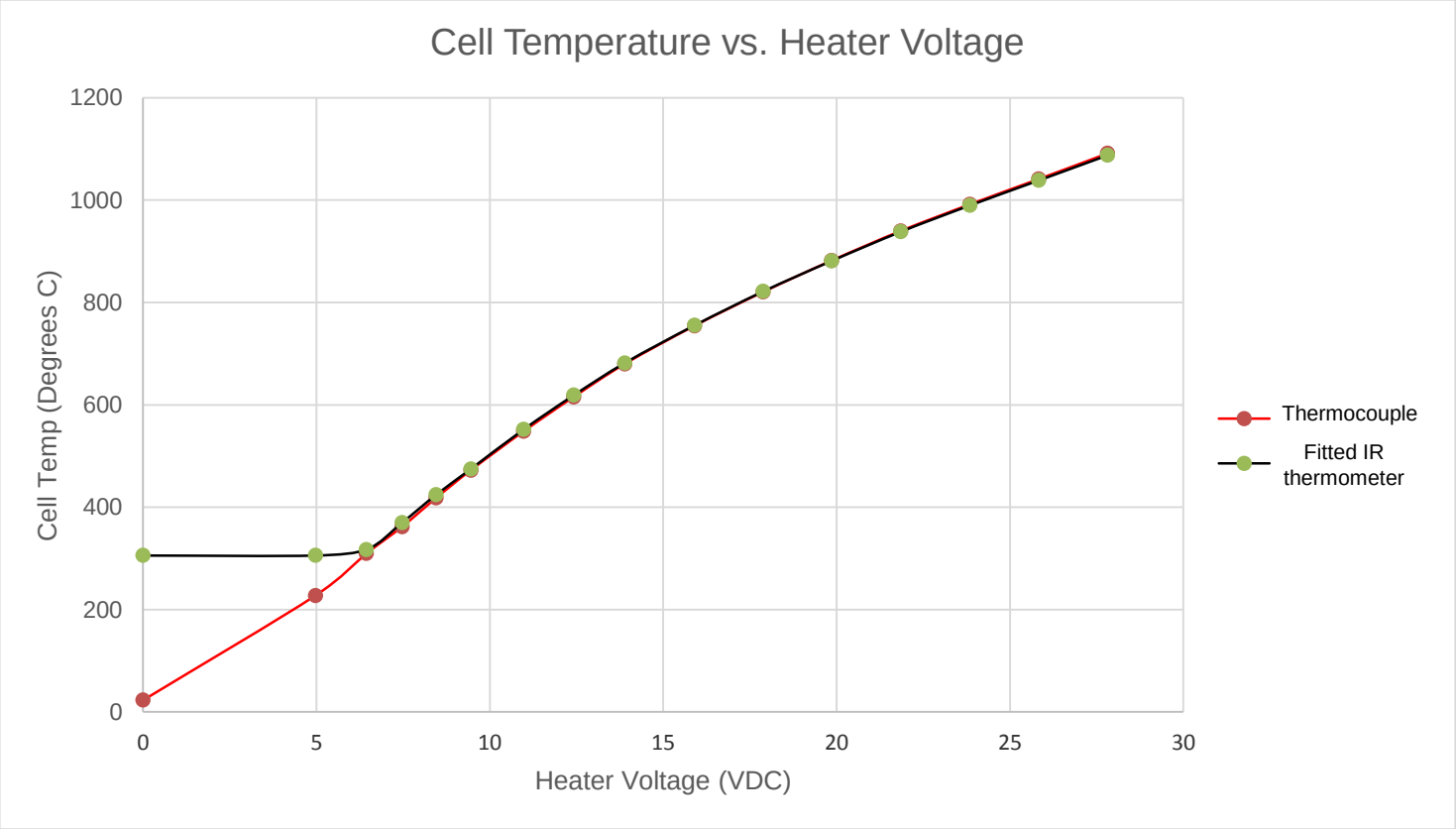

- IR thermometer configured for 4-20 ma output into 250 ohm load
- Fitting equation is T = 340*(V-1) + 310.
- IR thermometer does not generate valid output until temperature exceeds ~350 °C
- IR thermometer wavelength sensitivity: 1.45-1.80 µm: near blackbody peak for 500-1500C

Calibrating the Flow Calorimeter

1. Turn on the calorimeter circulating fan and adjust to approx. 9V across the fan.
2. Once set, do not change fan speed potentiometer setting.
3. Apply power starting at 5V and go up to voltage yielding ~1000C heater winding temperature
4. For each power setting, record inlet and outlet air temps and applied DC power.
5. Plot outlet air temp rise over ambient vs. applied power. Graph should be linear

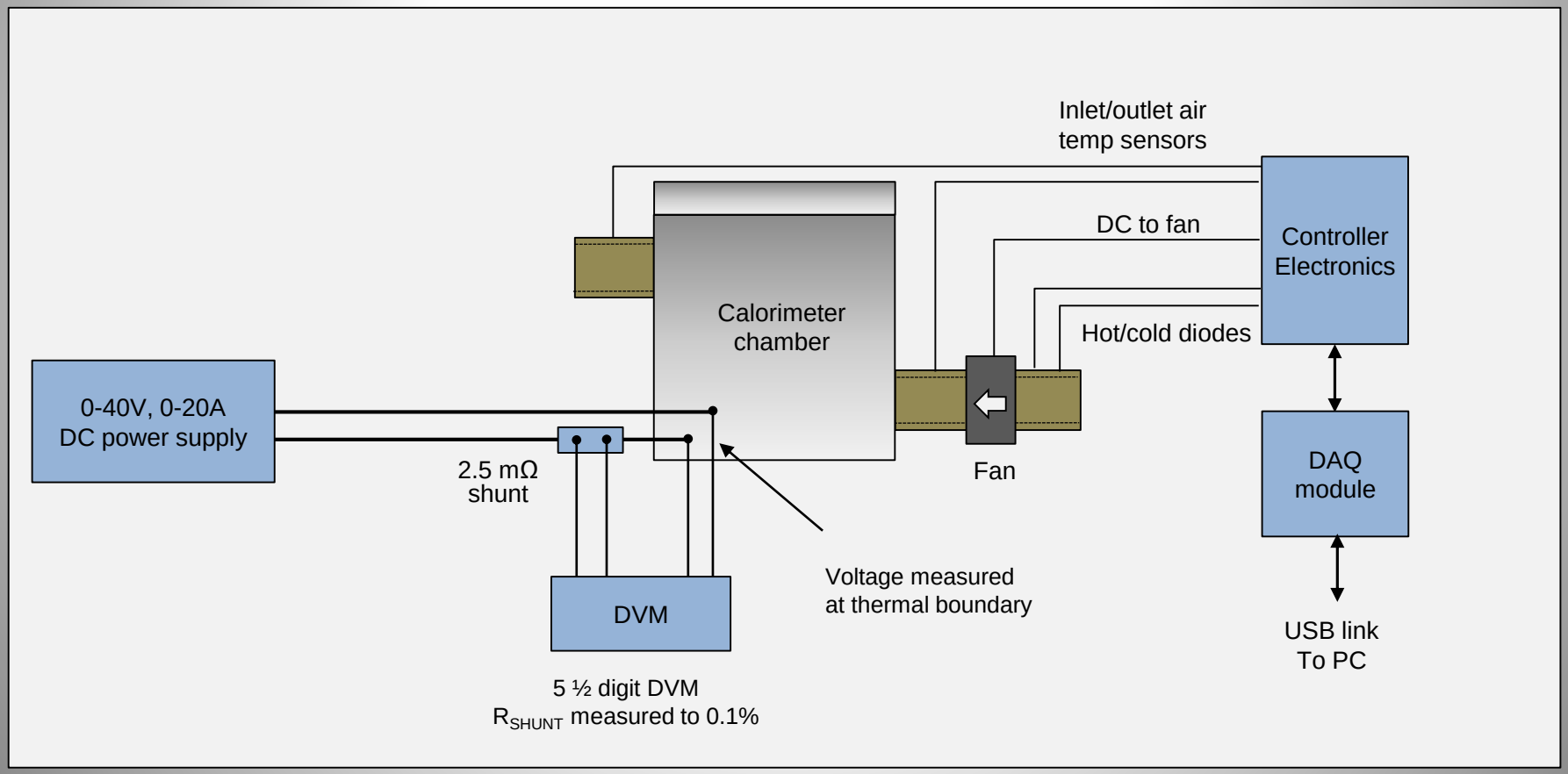

Air Flow Calorimeter Calibration Results

Test performed with empty alumina tube in cell pressurized with H_2 to ~ 20 psi

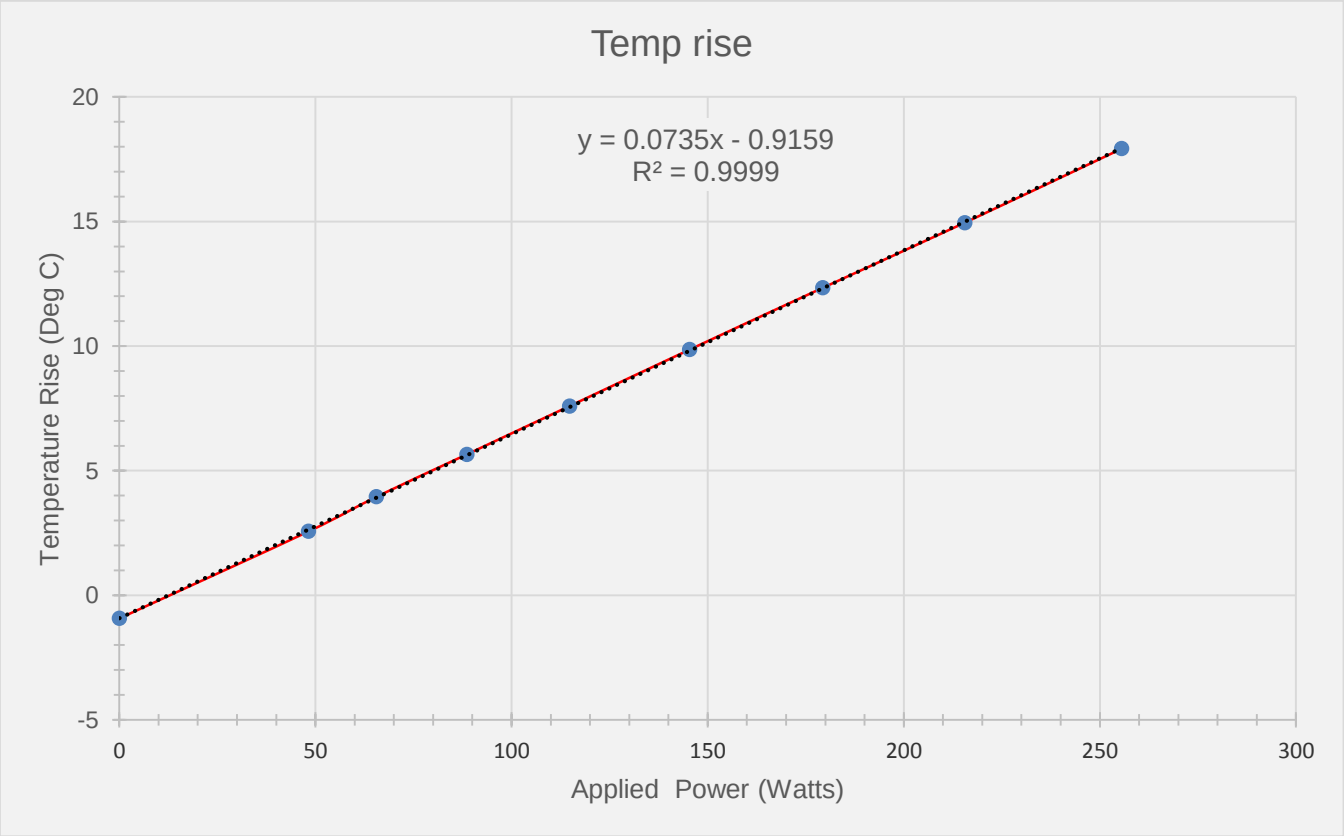

- Inverse slope yields 13.61 W per degree C air temp rise
- Nonzero Y-intercept is due to offset disparity between the two temperature sensors
- Estimated calorimeter resolution: ±1 Watt

Test Results with Active Materials

Run #1

Materials:	0.5g Hunter Chemical AH50 Ni, 0.5g Al_2O_3 powder, 35 mg Li (unknown supplier)
Pretreatment:	Heat under vacuum to 350C to remove air, water vapor and to melt Li, let cool
H_2 press	Initial H_2 pressure: 20 psi introduced into cell at ambient temp
Temperature:	350 – 900 °C in ~100C increments
Results:	No excess heat
Teardown:	Alumina tube attached by molten Li, cracked in several places

Run #2

Modifications	Alumina tube lined with 20 mil wall thickness 316L SS tube
Materials:	1.0g Hunter Chemical AH50 Ni, 35 mg Li (unknown supplier)
Pretreatment:	Heat under vacuum to 350C to remove air, water vapor and to melt Li, let cool
H_2 press	Initial H_2 pressure: 20 psi introduced into cell at ambient temp
Temperature:	350 – 900 °C in ~100C increments
Results:	No excess heat
Teardown:	SS tube showed signs of discoloration but no external damage due to molten Li

Run #3

Materials:	1.0g Novamet 123 Ni, 100 mg Al powder (unknown supplier), 35 mg Li (unknown supplier)
Pretreatment:	Under vacuum heat first to 350C (melt Li) and then to 750C (to melt Al), let cool
H_2 press	Initial H_2 pressure: 20 psi. introduced into cell at ambient temp
Temperature:	800 – 1100°C in ~100C increments
Results:	No excess heat
Observations:	50% H_2 pressure drop once cell had cooled

Damaged Alumina tube

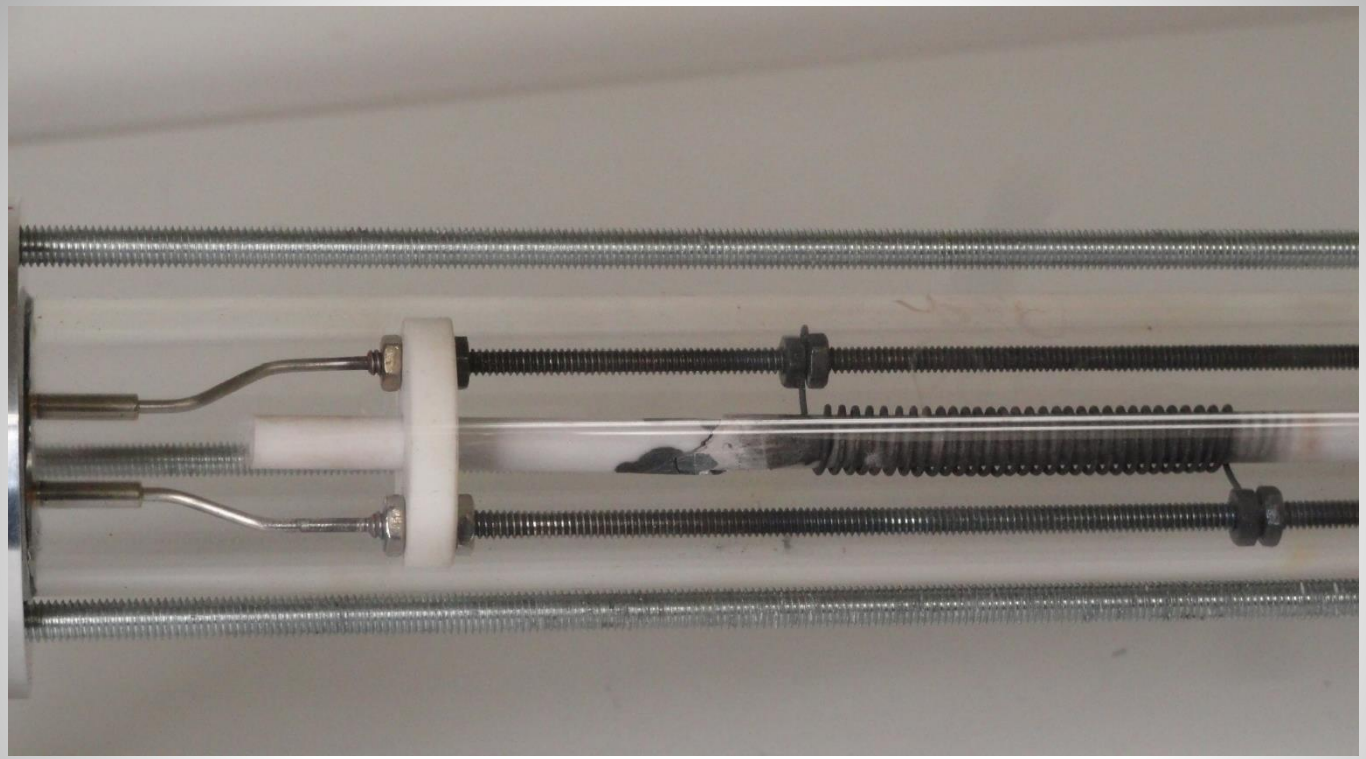

Damage occurred for max temperature < 800C° and duration of heating < 2 hours

Conclusions and Next Steps

- Airflow calorimetry is accurate and repeatable
  - Fan in servo loop using thermal mass feedback yields excellent linearity
  - Estimated repeatability is ±1 watt
- Capsule and heater assembly are reliable and robust
  - 316L SS liner tolerates molten Li
  - 20+ hours of operation with no signs of failure or leakage
- Lack of excess energy, despite close adherence to Parkhomov protocol indicates that key information is missing
  - Assume that both Rossi, and Parkhomov did generate COP >>1
  - Morphology of the Ni and its interaction with H + catalyst are not well understood.
  - Option 1: Continue the Edisonian approach and hope we get lucky: or
  - Option 2: Develop a theory (many have been proposed), but I believe we have sufficient experimental evidence on which to propose a theory that is <u>testable and consistent with the known laws of physics</u>.

Start with the Tunneling Problem

- Requires no qualitative assumptions that are inconsistent with known physics.
- Need to get inter-nuclear distance down to ~0.01Å for LENR rates consistent with observed energy output
  - Note: this distance is still 100x greater than typical nuclear reaction distances
  - Typical inter-nuclear distance is 0.7-0.8 Å for H_2 molecule or Ni-H complex
- Conventional phonon dynamics will not get us there
  - Typical energies are 0.025 eV and amplitudes are <0.1Å
  - Phonons behave as a plane wave and do not lend themselves to energy localization
- The key is to properly incorporate nonlinear effects
- Nonlinear systems allow for <u>energy localization</u> and offer the possibility of a tunneling mechanism
  - Many instances of energy localization have been observed in both continuous and discrete systems: solitons, rogue waves, <u>discrete breathers</u>
  - Numerous papers (Sievers, et al) predict the existence of DBs, where the localized energy can be a significant percentage of the entire lattice energy.
  - Proton-proton DBs in anti-phase mode may yield sufficiently small inter-particle distances during part of an oscillation cycle.

Link Between DBs and LENR

Submitted to Journal of Condensed Matter Nuclear Science (16.06.2014) revised and accepted on 20.07.2014.

Low energy nuclear reactions driven by discrete breathers

V.I. Dubinko
NSC Kharkov Institute of Physics and Technology, Kharkov 61108, Ukraine

A new mechanism of LENR in solids is proposed, which is based on the large amplitude anharmonic lattice vibrations, a.k.a. intrinsic localized modes or "discrete breathers" (DBs). In particular, so called gap DBs, which can arise in diatomic crystals such as metal hydrides, are argued to be the LENR catalyzers. The large mass difference between H or D and the metal atoms provides a gap in phonon spectrum, in which DBs can be excited in the H/D sub-lattice resulting in extreme dynamic closing of adjacent H/D atoms (~ 0.01 Å) required for the tunneling through nuclear Coulomb barrier. DBs have been shown to arise either via thermal activation at elevated temperatures or via knocking atoms out of equilibrium positions under non-equilibrium gas loading conditions, employed under radiolysis or plasma deposition methods. The DB statistics in both cases is analyzed, and an attempt is made to quantify part of the vibrational problem in terms of electrochemical current or ion flux, connecting them with external excitation of DBs that act as *nano-colliders of deuterons* triggering LENR. Resulting analytical expressions (under selected set of material parameters) describe quantitatively the observed exponential dependence on temperature and linear dependence on the electric (or ion) current. Possible ways of engineering the nuclear active environment based on the present concept are discussed.

Modeling DBs Utilizing MM Techniques

- Nonlinear systems of this sort lend themselves to numerical analysis
  - Early digital computer (MANIAC I) was used to analyze the FPU problem and gave non-intuitive results, including energy localization
  - Potential included quadratic (Hooke's law) plus nonlinear (cubic and quartic) terms
- Now jump ahead 50 years…
  - Computational dynamics on the molecular level has become a mature field
- Identify a MM tool with the required capabilities for simulating lattice + H + catalyst
  - Exact modeling (DFT) of valence electrons for alkali, transition metals
  - Appropriate potentials giving necessary nonlinear terms: Lennard-Jones/Morse potentials
  - Ability to make and break bonds (Norm conserving pseudo-potentials)
- Construct Ni lattice, add H and catalyst and determine if DBs form
  - Morphology that supports DBs (we expect it to be unique)
  - Minimum inter-nuclear distance?
  - What is the DB lifetime and density
  - DB frequency: within phonon gap (soft) above phonon gap (hard)
  - Effect of choice of transition metal
  - Function of catalyst
- Make the jump from MM results to fabrication of materials with desired nano-properties
  - No other place in the world is so adept at fabricating nano structures as this valley